Register your product and get support at

www.philips.com/welcome

SL UPORABNIŠKI PRIROČNIK

SR KORISNIČKI PRIRUČNIK

RO MANUAL DE UTILIZARE

UK ПОСІБНИК КОРИСТУВАЧА

BG РЪКОВОДСТВО ЗА ПОТРЕБИТЕЛЯ

HR KORISNIČKI PRIRUČNIK

HU HASZNÁLATI ÚTMUTATÓ

SK POUŽÍVATEĽSKÁ PRÍRUČKA

PHILIPS

Downloaded from www.Manualslib.com manuals search engine

WARNING

To prevent fire or shock hazard, do not expose the AC power adaptor to rain or moisture.

Do not install the appliance in a confined space, such as a bookcase or built-in cabinet.

To prevent fire, do not cover the ventilation of the apparatus with newspapers, table-cloths, curtains, etc. And don't place lighted candles on the apparatus.

To prevent fire or shock hazard, do not place objects filled with liquids, such as vases, on the apparatus.

CAUTION

The use of optical instruments with this product will increase eye hazard.

Certain countries may regulate disposal of the battery used to power this product. Please consult with your local authority.

CAUTION

- INVISIBLE LASER RADIATION WHEN OPEN
- DO NOT STARE INTO BEAM OR VIEW DIRECTLY WITH OPTICAL INSTRUMENTS

The validity of the CE marking is restricted to only those countries where it is legally enforced, mainly in the countries EEA (European Economic Area).

ATRAC3plus and ATRAC3 are trademarks of Sony Corporation.

Owner's Record

The model number is located at the rear and the serial number is located inside the lid of the CD player. Record the serial number in the space provided below. Refer to these numbers whenever you call upon your Aiwa dealer regarding this product.

Model No. XP-SN70

Serial No. _____

For the customers in the USA

This equipment has been tested and found to comply with the limits for a Class B digital device, pursuant to Part 15 of the FCC Rules. These limits are designed to provide reasonable protection against harmful interference in a residential installation. This equipment generates, uses, and can radiate radio frequency energy and, if not installed and used in accordance with the instructions, may cause harmful interference to radio communications. However, there is no guarantee that interference will not occur in a particular installation. If this equipment does cause harmful interference to radio or television reception, which can be determined by turning the equipment off and on, the user is encouraged to try to correct the interference by one or more of the following measures:

– Reorient or relocate the receiving antenna.
– Increase the separation between the equipment and receiver.
– Connect the equipment into an outlet on a circuit different from that to which the receiver is connected.
– Consult the dealer or an experienced radio/TV technician for help.

You are cautioned that any changes or modifications not expressly approved in this manual could void your authority to operate this equipment.

Klassische Projektionsuhr mit Dual-Alarm
Modell: RM308P / RM308PA / RM308PU / RA308PH

BEDIENUNGSANLEITUNG

DE

ÜBERSICHT

VORDERANSICHT

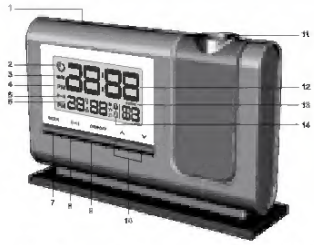

1. **SNOOZE / LIGHT**: Schlummeralarm aktivieren; Hintergrundbeleuchtung aktivieren
2. Indikator für Signalempfang
3. Batterien der Basiseinheit sind schwach / kein Batterie
4. PM: Vor- und Nachmittag (AM / PM) anzeigen
5. ((●)): Alarmzeit wird angezeigt
6. Alarmzeit / Kalender
7. **MODE**: Einstellungen / Anzeige ändern
8. ((●)): Alarmstatus anzeigen; Alarm einstellen; auf Alarm- / Kalenderanzeige ändern
9. **ON OFF**: Alarmfunktion aktivieren / deaktivieren
10. ∧ / ∨: Werte der gewählten Einstellung erhöhen / verringern; Zeitempfangssignal aktivieren / deaktivieren
11. Projektor: Uhrzeit / Alarmstatus projizieren
12. Uhrzeit mit Sekunden / Wochentag
13. Zeitzonenausgleich
14. Alarm 1 / 2 ist aktiviert (ON)

RÜCKANSICHT

1. **FOCUS**: Projiziertes Bild scharfstellen
2. **RESET**: Gerät auf Standardeinstellungen zurücksetzen
3. **PROJECTION ON/OFF**: Dauerprojektion aktivieren / deaktivieren
4. Anschluss für Netzadapter

UNTERE ANSICHT

1. Batteriefach

ERSTE SCHRITTE

STROMVERSORGUNG

2 x Batterien UM-4 (AAA)

So legen Sie die Batterien ein:

1. Entfernen Sie die Abdeckung des Batteriefachs.
2. Legen Sie die Batterien ein und achten Sie auf die Übereinstimmung der Polaritäten (+/-).
3. Drücken Sie nach jedem Batteriewechsel auf **RESET**.

	BEDEUTUNG
	Die Ladung der Batterie ist niedrig
	Keine Batterie installiert – nur Netzadapter

1 x Netzadapter

Benutzen Sie für den Betrieb des Geräts wahlweise den mitgelieferten Netzadapter. Für die dauerhafte Verwendung von Projektor / Hintergrundbeleuchtung muss der Netzdapter angeschlossen sein.

Stellen Sie sicher, dass der Netzadapter nicht blockiert und für das Gerät leicht zugänglich ist.

HINWEIS Die Basiseinheit und der Netzadapter dürfen keinen feuchten Bedingungen ausgesetzt werden. Es dürfen keine mit Flüssigkeit gefüllte Objekte, wie Blumenvasen, auf Basiseinheit oder Netzadapter gestellt werden.

Um das Gerät vollständig vom Netz zu trennen, ziehen Sie den Stecker des Netzadapters aus der Steckdose.

FUNKUHR

ZEITSIGNALEMPFANG

Dieses Produkt synchronisiert seine Uhr automatisch mit einem Zeitsignal.

RM308P: EU: DCF-77-Signal: Innerhalb von 1500 km von Frankfurt, Deutschland.

RM308PA: USA: Signal WWVB-60: Innerhalb von 3200km von Fort Collins, Colorado. Wählen Sie die Zeitzone der Uhr manuell aus (Pacific, Mountain, Central oder Eastern).

RM308PU: UK: MSF-60-Signal: Innerhalb von 1500 km von Anthorn, England.

So aktivieren / deaktivieren Sie den Zeitsignalempfang:

Halten Sie ∧ gedrückt, um den Zeitsignalempfang zu aktivieren, oder ∨ **VOL-**, um ihn zu deaktivieren.

HINWEIS Der Empfang nimmt etwa 2-10 Minuten in Anspruch. Wenn das Signal schwach ist, kann es bis zu 24 Stunden dauern, bis ein gültiges Signal empfangen wird.

Indikator für Zeitsignalempfang:

STARKES SIGNAL	SCHWACHES / KEIN SIGNAL

Wenn der Signalempfang nicht erfolgreich ist, platzieren Sie Ihr Gerät in die Nähe eines Fensters und halten Sie ∧ gedrückt, um eine neuerliche Signalsuche zu veranlassen.

DIE UHR MANUELL EINSTELLEN

Um die Uhr manuell einzustellen, müssen Sie zuerst den Zeitsignalempfang deaktivieren.

1. Halten Sie **MODE** gedrückt, um die Einstellungen aufzurufen.
2. Drücken Sie auf **MODE**, um zwischen den Anzeigearten umzuschalten.
3. Drücken Sie auf ∧ oder ∨, um die Werte der gewählten Einstellung zu erhöhen / zu verringern.
4. Drücken Sie zur Bestätigung auf **MODE**.

Die Reihenfolge der Einstellungen lautet: Zeitzonenausgleich, 12-/24-Stundenformat, Stunde, Minute, Jahr, Monat-Tag / Tag-Monat, Monat, Tag und Sprache.

Der Zeitzonenausgleich stellt die Uhr auf bis zu +/- 23 Stunden von der empfangenen Signalzeit ein. Wenn Sie den Zeitsignalempfang deaktiviert haben, dürfen Sie keinen Wert für die Zeitzone einstellen.

HINWEIS Wenn Sie +1 in der Einstellung des Zeitausgleichs eingeben, ergibt dies Ihre Ortszeit zuzüglich 1 Stunde. Wenn Sie sich in den USA befinden (RM308PA), stellen Sie die Uhr wie folgt ein:

PA für Pacific Time MO für Mountain Time
CE für Central Time EA für Eastern Time

HINWEIS Die Sprachoptionen sind Englisch (E), Deutsch (D), Französisch (F), Italienisch (I) und Spanisch (S).

ALARM

So stellen Sie den Alarm ein:

1. Drücken Sie auf **ALARM**, um zwischen Alarm 1 / 2 umzuschalten.
2. Halten Sie **ALARM** gedrückt, um die Alarmeinstellung aufzurufen.
3. Drücken Sie auf ∧ / ∨, um Stunde / Minute einzustellen.
4. Drücken Sie zur Bestätigung auf **ALARM** oder **MODE**.

1 / 2 gibt an, dass der Alarm aktiviert ist (ON).

So aktivieren / deaktivieren Sie Alarm 1 und / oder 2:

1. Drücken Sie auf um Alarm 1 oder 2 auszuwählen.
2. Halten Sie gedrückt.

So schalten Sie den Alarm stumm:

- Drücken Sie auf **SNOOZE / LIGHT**, um den Alarm 8 Minuten lang stummzuschalten

ODER

- Drücken Sie eine beliebige andere Taste, um den Alarm auszuschalten und ihn nach 24 Stunden erneut zu aktivieren.

So wählen Sie den Anzeigemodus aus:

Drücken Sie auf **MODE**, um zwischen den Anzeigearten zu wechseln (Alarm, Kalendar mit Sekunden, und Kalender mit Wochentag).

PROJEKTION

So aktivieren Sie die Projektion / Hintergrundbeleuchtung:

- Drücken Sie auf **SNOOZE / LIGHT**.

So aktivieren / deaktivieren Sie die Dauerprojektion:

- Verschieben Sie den Schalter **PROJECTION** bei angeschlossenem Netzadapter.

So drehen Sie das Bild um 180 ° (bei projiziertem Bild):

- Drücken Sie innerhalb von 5 Sekunden, nachdem Sie **SNOOZE / LIGHT** gedrückt haben, erneut auf **SNOOZE / LIGHT**.

So verstellen Sie die Schärfe des Bildes:

- Drehen Sie das **FOCUS**-Rad.

HINWEIS Schauen Sie nicht direkt in den Projektor, wenn die Projektion beleuchtet ist.

RESET

Drücken Sie auf **RESET**, um das Gerät auf die Standardeinstellungen zurückzusetzen.

VORSICHTSMASSNAHMEN

- Setzen Sie das Gerät keiner extremen Gewalteinwirkung und keinen Stößen aus, und halten Sie es von übermäßigem Staub, Hitze oder Feuchtigkeit fern.
- Sie dürfen die Belüftungsöffnungen nicht mit Gegenständen abdecken, wie z.B. Zeitungen, Vorhänge, usw.
- Tauchen Sie das Gerät niemals in Wasser. Falls Sie eine Flüssigkeit über das Gerät verschütten, trocknen Sie es sofort mit einem weichen, faserfreien Tuch.
- Reinigen Sie das Gerät keinesfalls mit scheuernden oder ätzenden Mitteln.
- Machen Sie sich nicht an den internen Komponenten des Geräts zu schaffen, da dies zu einem Verlust der Garantie führen kann.
- Verwenden Sie nur neue Batterien. Verwenden Sie keinesfalls neue und alte Batterien gemeinsam.
- Die in dieser Anleitung dargestellten Abbildungen können sich vom Original unterscheiden.
- Entsorgen Sie das Produkt nicht im allgemeinen Hausmüll, sondern ausschließlich in den dafür vorgesehenen, kommunalen Sammelstellen, die Sie bei Ihrer Gemeinde erfragen können.
- Wenn dieses Produkt auf bestimmte Holzflächen gestellt wird, kann die Oberfläche beschädigt werden. Oregon Scientific ist nicht haftbar für solche Beschädigungen. Entsprechende Hinweise entnehmen Sie bitte der Pflegeanleitung Ihres Möbelherstellers.
- Der Inhalt dieser Anleitung darf ohne Genehmigung des Herstellers nicht vervielfältigt werden.
- Verbrauchte Batterien gehören nicht in den Hausmüll. Bitte geben Sie sie bei einer Sammelstelle für Altbatterien bzw. Sondermüll ab.
- Bitte beachten Sie, dass manche Geräte mit einem Batterieunterbrechungsstreifen bestückt sind. Vor dem ersten Gebrauch müssen Sie den Streifen aus dem Batteriefach ziehen.

HINWEIS Die technischen Daten für dieses Produkt und der Inhalt der Bedienungsanleitung können ohne Benachrichtigung geändert werden.

HINWEIS Eigenschaften und Zubehör nicht in allen Ländern verfügbar. Weitere Informationen erhalten Sie von Ihrem Fachhändler vor Ort.

TECHNISCHE DATEN

TYP	BESCHREIBUNG
Abmessungen (L x B x H)	146 x 94 x 40 mm
Gewicht	157 g (ohne Batterie)
Stromversorgung	AC/DC-Netzadapter 4,5V 2 Batterien UM-4 (AAA) 1,5V

ÜBER OREGON SCIENTIFIC

Besuchen Sie unsere Website www.oregonscientific.de und erfahren Sie mehr über unsere Oregon Scientific-Produkte. Auf der Website finden Sie auch Informationen, wie Sie im Bedarfsfall unseren Kundendienst erreichen und Daten herunterladen können.

Für Internationale Anfragen besuchen Sie bitte unsere Website:
www2.oregonscientific.com/about/international.asp.

EU-KONFORMITÄTSERKLÄRUNG

Hiermit erklärt Oregon Scientific, dass die Klassische Projektionsuhr mit Dual-Alarm (Modell: RM308P / RM308PA / RM308PU / RA308PH) mit den grundlegenden Anforderungen und anderen relevanten Vorschriften der Richtlinie 1999/5/EG übereinstimmt. Eine Kopie der unterschriebenen und mit Datum versehenen Konformitätserklärung erhalten Sie auf Anfrage über unseren Oregon Scientific Kundendienst.

KONFORM IN FOLGENDEN LÄNDERN

Alle Länder der EU, Schweiz (CH)
und Norwegen (N)

Downloaded from www.Manualslib.com manuals search engine

Table 3. DIP Switch S1 Options

Switch	Function	Description
S1-1	Framing Format	Enables either Extended Superframe Format (ESF) or Superframe Format (SF). This option must be configured identically with all other T1 network equipment on this circuit. On* SF Off ESF
S1-2	Line Code Format	Enables Bipolar Eight-Zero Substitution (B8ZS), which allows for Clear Channel operation for the T1 carrier system, or enables Alternate Mark Inversion (AMI). This option must be configured identically with all other T1 network equipment on this circuit. On* AMI Off B8ZS
S1-3	TR-08 Signaling	Enables TR-08 signaling option. When enabled, S1-1 is ignored. On* Enabled Off Disabled
S1-4	CSU Loopback	Enables the CSU Loopback Function. Unit will respond to CSU loopback sent from a remote network device or test equipment. Off* Enabled On Disabled
S1-5 S1-6	Timing Mode Timing A Timing B	Determines clock source for TA 850. S1-5 / S1-6 / Function Off / Off / Loop timing: Derives timing from T1 On / Off / External timing: Derives timing from external BITS clock. Off / On / Local timing: Clock generated from internal timing source. On* / On* / Loop timing: Derives timing from T1.
S1-7 S1-8	DS1 Attenuation LBO A LBO B	Selects attenuation to set receiver sensitivity in decibels (dB). S1-7 / S1-8 / Setting Off / Off / 0 dB/0-133 ft (LBO) On / Off / -7.5 dB Off / On / -15 dB On* / On* / -22.5 dB (Note: Additional LBO settings can be provisioned through the menu interface.)
*Denotes factory default setting.		

Downloaded from www.Manualslib.com manuals search engine

3 Connect to the internet.

Now you're ready to connect to the internet!

3 Mobile Broadband connection manager legend:

Connect to the internet

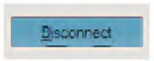

Disconnect from the internet

Open the internet browser

Open the SMS window

Open the contacts window

Access My 3 to check usage & recharge

For Windows computers

- Double click the 3 shortcut icon on your desktop to open the 3 Mobile Broadband connection manager.
- Select your service type when prompted.
- Click the **Connect** button to get online.
- Click the **Browser** icon to open your internet browser.

If you have successfully connected the 3 icon will appear in the Windows Taskbar on the bottom right hand corner of your screen.

For Mac computers

- On the Finder toolbar click on 'Go'.
- On the drop down menu select **Applications**.
- Select your service type when prompted.
- Click on the **3 Mobile Broadband** CD icon.
- Click on **Connect** to get online.
- Open the 3 Mobile Broadband connection manager.
- Click the **Browser** icon to open your internet browser.

First time prepaid users - upon first use of your 3 Mobile Broadband Prepaid service you will need to activate - to do this you will be automatically redirected to our activation page once you're connected to the internet. Please refer to the Mobile Broadband Prepaid starter guide for instructions.

How to remove your Internet Key :

For Windows computers

- Open the 3 Mobile Broadband connection manager.
- Click the **Disconnect** button.
- Double click the **Safely Remove Hardware** icon located in the Taskbar in the bottom right hand of your screen.
- Double click the **Huawei Mass Storage USB Device** and select **stop**.
- At the prompt remove the Internet Key from the USB port.

For Mac computers

- Open the 3 Mobile Broadband connection manager.
- Click the **Disconnect** button.
- Drag the Internet Key icon on the desktop to the **Eject** icon on the bottom right of the screen.
- Remove the Internet Key from the USB port.

3L8275 Starter Guide_V2.indd 5-6 13/5/09 1:28:50 PM

Introduction

Congratulations on purchasing your new colour TV. It has been designed and tested to the highest standards and will provide good quality pictures and sound for your enjoyment.

If you follow these operating instructions you will quickly learn how to adjust and operate all the functions of your new TV; but always read and perform the instructions in the sequence shown.

TV - **Indicates actions that are performed using the TV buttons or sockets.**

- Indicates actions that are performed using the remote control handset.

Installing the TV

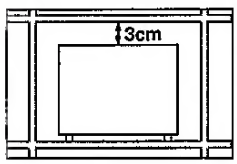

TV **To install the TV**

- Remove any packaging from the TV.
- Find the remote control handset and indoor aerial within the packaging.
- Place the TV on a solid base (e.g. a TV/video cabinet).
- Leave at least 3 cm around each side of the TV for ventilation.

TV **To connect the TV**

IMPORTANT: The TV is only suitable for a mains voltage of 220/240 V ~, 50 Hz (Consult your dealer if the mains supply is different).

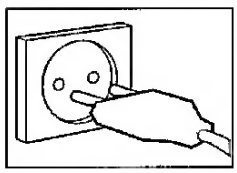

- Connect the TV to the mains supply socket.

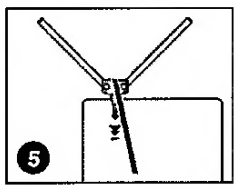

- If the indoor aerial is used, attach it to the TV at the mounting-socket at the top-left of the rear panel.

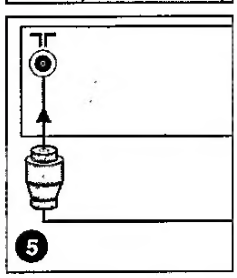

- Connect the aerial plug to the "I" socket on the back of the TV.

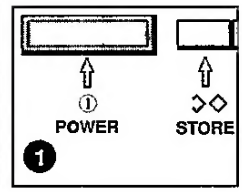

TV **To switch the TV on**

- Press the ⏻ POWER button on the front of the TV.

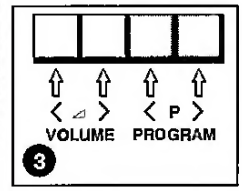

- If the RED lamp below the TVscreen is on, then you must press the < or > PROGRAM button. The TV will then switch on (for further information refer to the section 'To select stand-by mode').

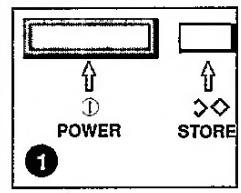

TV **To switch the TV off**

- Press the ⏻ POWER button on the front of the TV.

(If you want to switch off the TV temporarily refer to the section 'To select stand-by mode').

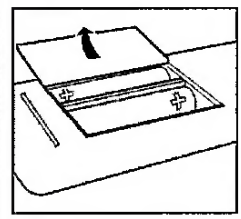

To insert batteries in the remote control handset

- Remove the battery cover on the back of the remote control handset.
- Insert the two batteries supplied (type LR03 1.5V).
- Replace the battery cover.

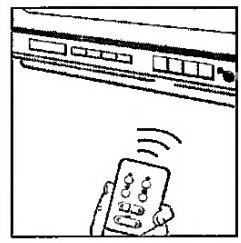

To test the remote control handset

- Switch on the TV.
- Hold the remote control handset and direct it towards the lamp below the screen.

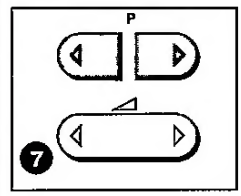

- Press the ◁ P or ▷ P program button. The lamp will flash 'RED' each time a button is pressed.

Downloaded from www.Manualslib.com manuals search engine

The HP BladeSystem enclasures can accammadate half-height ar full-height blades in single- ar dauble-wide farm factars. The HP website lists the available praducts: www.hp.cam/ga/bladesystem/.

Optianal mezzanine cards within the server blades pravide netwark cannectivity by means af the intercannect madules in the intercannect bays at the rear af the enclasure. The cannectians between server blades and a netwark fabric can be fully redundant.

A c-Class enclasure alsa hauses Onbaard Administratar madules. Onbaard Administratar pravides intelligence thraughaut the infrastructure ta manitar pawer and thermal canditians, ensure carrect hardware canfiguratians, simplify enclasure setup, and simplify netwark canfiguratian. Far same enclasures, custamers have the aptian af installing a secand Onbaard Administratar madule that acts as a redundant cantraller in an active-standby made. The Insight Display panel an the frant af the enclasure pravides an easily accessible user interface far the Onbaard Administratar.

Depending an the target market requirements far the specific enclasure, BladeSystem c-Class enclasures emplay a flexible, madular pawer architecture ta meet different pawer requirements. Far example, the c7000 enclasure can use single-phase ar three-phase AC ar DC pawer inputs. As af this writing, the c3000 enclasure uses single-phase (auto-sensing high-line ar law-line) pawer inputs. Pawer supplies can be canfigured redundantly; they cannect ta a passive pawer backplane that distributes shared pawer ta all campanents.

Ta caal the enclasure, HP designed the Active Caal fan. High-perfarmance, high-efficiency Active Caal fans pravide redundant caaling acrass the enclasure and ample caaling capacity far future needs. These fans are hat-pluggable and redundant ta pravide cantinuaus uptime.

General-purpose compute solution

Recagnizing that a "ane size fits all" salutian daes nat adequately meet custamer needs, HP designed the BladeSystem c-Class as a general-purpase camputing salutian. A BladeSystem c-class enclasure—with its device bays, intercannect bays, NanStap signal midplane, and Onbaard Administratar—is a general-purpase infrastructure that can suppart many different aptians af server blades, starage blades, and intercannect devices. BladeSystem c-Class supparts PraLiant server blades using AMD ar Intel x86 pracessars, Integrity IA-64 server blades, StarageWarks starage blades, and intercannect madules that suppart a variety af netwarking standards including Ethernet, Fibre Channel, Serial Attached SCSI (SAS), and InfiniBand.

Physically scalable farm factars

The architectural madel far the BladeSystem c-Class uses device bays (far server ar starage blades) and intercannect bays (far intercannect madules praviding I/O fabric cannectivity) that enable a scale-aut ar a scale-up architecture.

Blade form factors

There are twa general appraaches ta scaling the device bays: scaling harizantally in a slim farm-factar, by praviding bays far single-wide and dauble-wide blades; ar scaling vertically in a wide farm-factar by praviding bays far half-height and full-height blades. After evaluating slim and wide blades, HP selected the wide blade farm factar ta suppart cast, reliability, and ease-af-use requirements, with the half-height size being aptimal far the majarity af full-functian server blades. Figure 4 shaws bath farm factars and haw a single, wide farm-factar device bay can accammadate either twa half-height server blades, stacked in an aver/under canfiguratian in a scale-aut canfiguratian, ar a full-height, higher-perfarmance blade in a scale-up canfiguratian.

The ability ta use either full ar half-height farm factars in the same space enables efficient real estate use. Custamers can fully papulate the enclasure with high-perfarmance server blades far a backend

Downloaded from www.Manualslib.com manuals search engine

General operating instructions

Suitable ovenware

Ovenware material	Mode of operation		
	Defrost-ing	Heating	Cooking
Ovenproof glass and ceramic dishes (without any metal parts, e.g. Pyrex, Oven-to-tableware)	X	X	X
Non ovenproof glass and porcelain (e.g. table crockery)[1)]	X	-	-
Glass ceramic and vitro-ceramic made of fire/frost proof material (e.g. Arcoflam)	X	X	X
Ovenproof earthenware [2)]	X	X	X
Plastic, heat-resistant up to 200 °C [3)]	X	X	X
Paper, cardboard	X	-	-
Cling film	X	-	-
Microwave cling film [3)]	X	X	X
Black-lacquered or silicone-coated baking tins	-	-	-

X suitable - non suitable

1) excluding silver, gold, platinum or metal decoration

2) does not include glaze containing metal

3) please note the maximum temperature stated by the manufacturer

Downloaded from www.Manualslib.com manuals search engine

Spin-drying

Spin-dry your laundry well before tumble-drying (at least at 800 min^{-1}). Higher spin speeds reduce power consumption during drying and make it more economical. Easy-care fabrics should be briefly spun before they are loaded in my drum.

Preparing your laundry

Close zip-fasteners and tie together loose strings (e. g. of aprons). You will thereby avoid tangling of your laundry.
Clothes made of double-layered fabrics (polyamide outer layer, cotton inner layer, e. g. anoraks) should be turned inside out before drying. You will then achieve a better tumble-drying effect.
Never dry new, dark-coloured fabrics together with light-coloured garments, since this may otherwise cause discoloration.

Downloaded from www.Manualslib.com manuals search engine

Ready

Now you are ready to start viewing and capturing video. You will need to start your camcorder or VCR playing. Press Play on your video source (VCR, DVD player, etc.).

Click Finish and the Wizard screen will disappear and you will see the full Capture Wizard interface.

Using Capture Wizard Video Capture/Playback tool for the first time:

You have just completed the Wizard screens to ensure that you have connected your video cables, selected your video format and now you are ready to capture video.

The Capture Wizard Interface

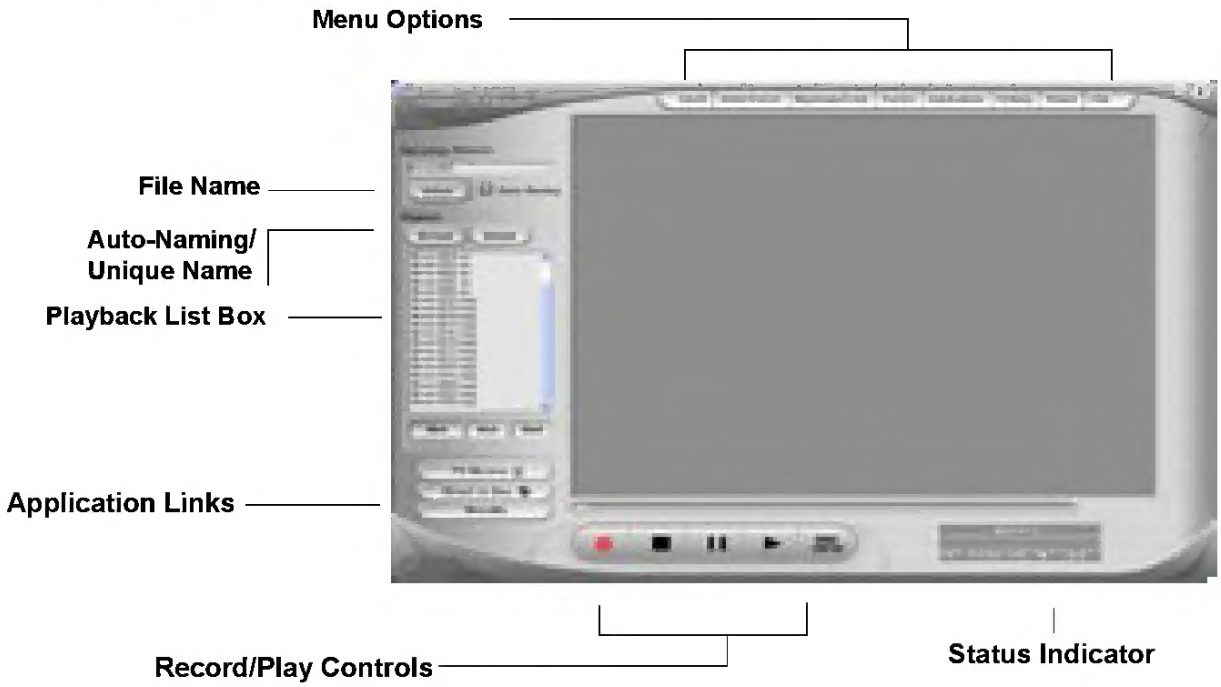

Preview and Record Video

1) Be sure your video device is playing a video
2) Click "Preview" and you will see video playing in the preview window. You will notice the status indicators are Blue and are displaying "Preview".
3) Click the "Stop" (■) button or press the "esc" key on your keyboard to stop video preview.
4) If you Click the Red "Record" (●) button while previewing video, the video will stop momentarily, then start again. When the video preview starts again, you are recording. You will notice the status indicators have turned red and are displaying "Record".
5.) To Stop recording, press the "Stop" (■) button or press the "esc" key on your keyboard.
6.) You will notice that the file name has been added to the playback list box.

Downloaded from www.Manualslib.com manuals search engine

Maintenance and Care

- **The hood must always be disconnected from the electricity supply before beginning any maintenance work.**

Cleaning the hood

- Clean the outside of the hood using a damp cloth and a solution of water and mild washing up liquid.
- Never use corrosive, abrasive or flammable cleaning products or products containing bleach. .
- Never insert pointed objects in the motor's protective grid.
- Only ever clean the switch panel and filter grill using a damp cloth and mild washing up liquid.
- It is extremely important to clean the unit and change the filters at the recommended intervals. Failure to do so will cause grease deposits to build up that could constitute a fire hazard.

Downloaded from www.Manualslib.com manuals search engine

Playing back

1 Slide POWER switch on the main unit toward ON to turn the power on.

The power indicator lights.
The power cannot be turned on by POWER of the remote control.
When using with the battery pack, the power may not be turned on at once. In this case, turn the power on again after 3 seconds. If the unit is still not turned on, recharge the battery pack.

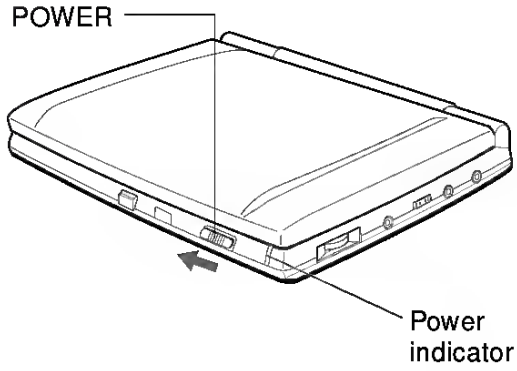

2 Press OPEN▲ to open the display panel.

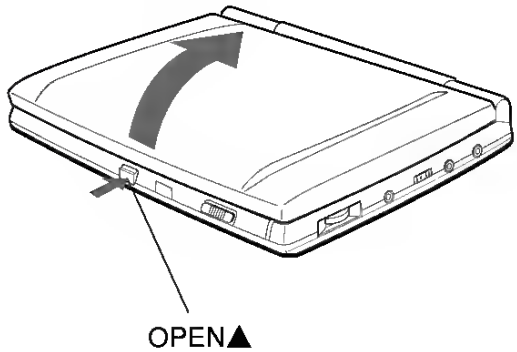

3 Put your finger on the pit DISC OPEN▲ on the left side of this unit and open the disc cover.

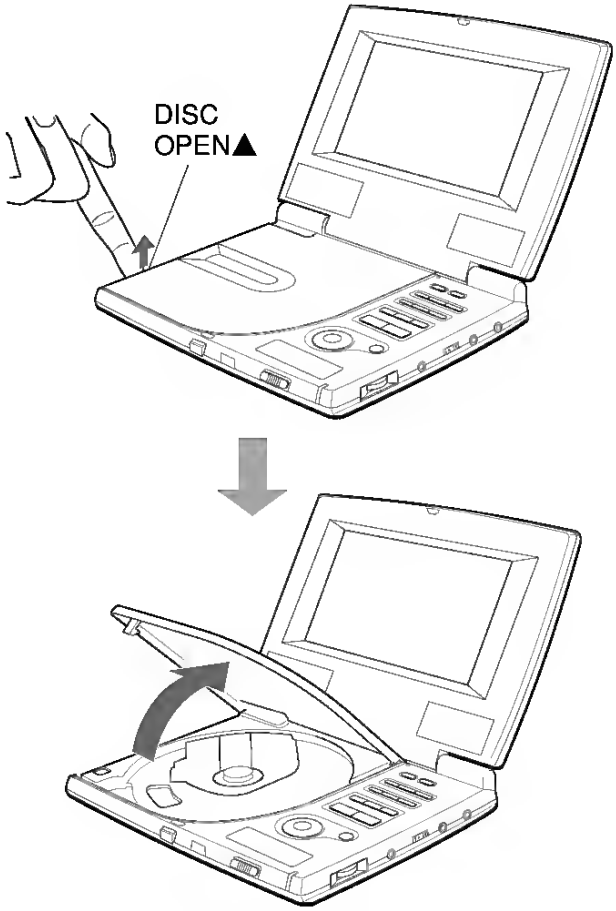

4 Load a disc with the label side up and push down around the center of it.

The disc is fixed with a click.

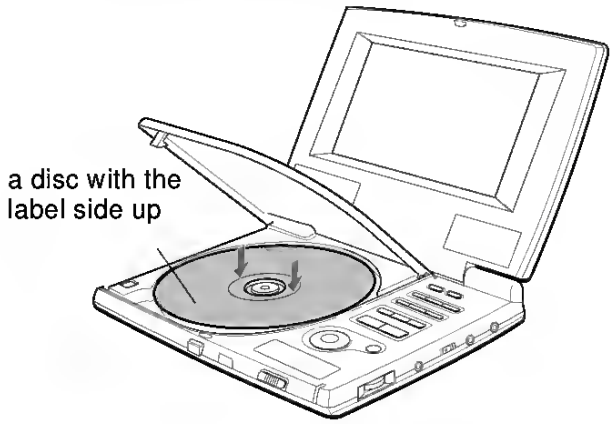

CONTINUE

Downloaded from www.Manualslib.com manuals search engine

Timer playback

Turns on the unit at a specified time for the specified duration. Make sure the clock is set correctly.

1 **Hold down SHIFT and press TIMER on the remote control.**
"◴" lights up and "◷ PLAY" is displayed.

2 **Within 12 seconds, press SET.**

3 **Press ◄◄ or ►► to set the timer-on time, and press SET.**
Each press changes the time in 1-minute steps. Holding these buttons down will vary the time in 10-minute units.

4 **Press ◄◄ or ►► (TUNER/BAND, AUX or ►II CD) to select the source, and press SET.**
- For timer play of a CD, select "CD".
- For timer play of a radio broadcast, select "TUNER". You will select the band later in step 7.
- For timer play of the equipment connected to the VIDEO/AUX IN jacks, select "AUX (VIDEO or TV)".

5 **Press ◄◄ or ►► to set the timer-activated duration, then press SET.**
With each press, the timer-activated duration changes in 5-minute steps between 5 to 240 minutes.

6 **Press ◄◄ or ►► (turn VOLUME on the main unit, or press VOLUME −,+ on the remote control) to adjust the volume for timer playback, and press SET.**
The volume level can be adjusted from 0 to 24.

7 **Prepare the source.**
To play CD, load a disc.
To play the radio, select the band and tune in the desired station.
To play external equipment connected to the VIDEO/AUX IN jacks, set an external timer for the equipment so that its playback begins at the same time.

8 **Press POWER ⏻STANOBY/ON (POWER) to turn the unit off.**
"◴" remains on the display to indicate the timer standby mode (when ECO mode is deactivated).
At timer-on time, the unit turns on and plays the selected source. After the specified timer-activated duration, the unit turns off again.

- Timer playback will not begin unless the unit is turned off first.
- Connected equipment cannot be turned on or off by the built-in timer of this unit. Use an external timer.

To check the timer setting
Hold down SHIFT and press TIMER on the remote control so that "◷ PLAY" appears on the display.
The timer-on time, the source and the timer-activated duration are displayed for 12 seconds.

To change the timer setting
Reset the timer again.

To cancel the timer
Hold down SHIFT and press TIMER on the remote control twice until "◷ OFF" is displayed. "◴" disappears from the display.

Tip:
Your timer setting is retained even if the timer is cancelled. Next time the timer is activated, you can change your previous setting, or simply use the same setting again.

En

Choose USB cable to connect the radio controller and mobile device

1. Open Mi Drone APP, select “Next” button

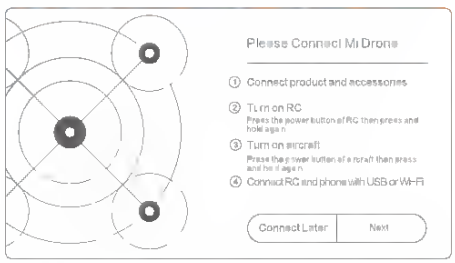

2. Pop up dialog box, select “USB connection”, tap “OK” button

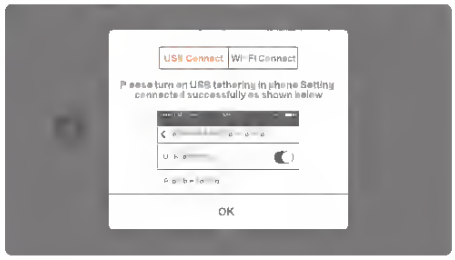

1. Open Mi Drone APP, select “Next” button

2. Pop up dialog box, select “USB connection”, tap “OK” button

Downloaded from www.Manualslib.com manuals search engine

How to Use the DNR (Noise Reduction) Control

For reasons such as poor cable reception, the picture can sometime appear slightly "speckled" (or signal noise shown in the picture). The DNR (Dynamic Noise Reduction) control can help eliminate this type of interference and improve the quality of the picture.

BEGIN

1. **Press the MENU button** on the remote to display the on-screen menu.
2. **Press the CURSOR UP ▲ or CURSOR DOWN ▼ button** until the word **PICTURE** is highlighted.
3. **Press the CURSOR RIGHT ▶ button** to display the **PICTURE** menu features.
4. **Press the CURSOR UP ▲ or CURSOR DOWN ▼** button to scroll the Picture menu features until the word **DNR** is highlighted.
5. **Press the CURSOR RIGHT ▶ button** turn the **DNR** feature ON or OFF.
6. **When finished, press the STATUS /EXIT button** to remove the menu from the TV's screen.

STOP

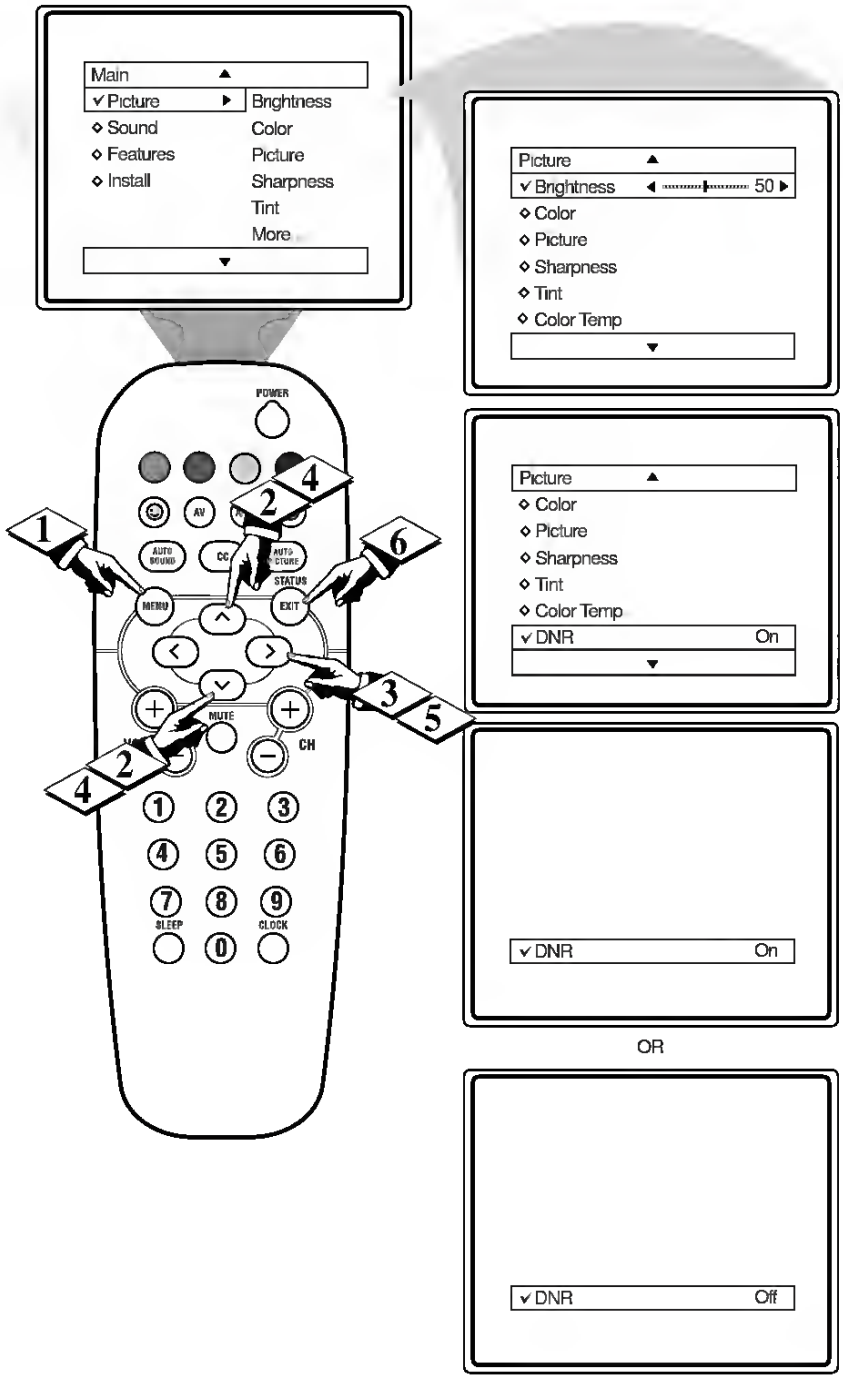

Smart Help

"Noise" Reduction is a video adjustment feature that affects the picture quality of the TV not the sound.

NOTE: If the Sharpness control setting is under 50 (see Picture Adjustments on the previous page), the DNR control will have little or no effect to the TV's picture when switched to ON.

Downloaded from www.Manualslib.com manuals search engine

Tip

- You can create and store up to four favourite lists on your TV

Select a favourite list

1 When watching TV, press **OK** to display the channel grid.
2 Press **OPTIONS**.
↳ The channel options menu appears.
3 Press **OK** to select **[Show favourite ch.]**.
↳ The favourite lists appear.
4 Press ▲▼ to select a favourite list.
5 Press **OK**.
↳ Only channels in the favourite list appear in the channel grid.

View all channels

You can exit a favourite list, and view all installed channels.

1 When watching TV, press **OK** to display the channel grid.
2 Press **OPTIONS**.
↳ The channel options menu appears.
3 Select **[Show favourite ch.]** > **[All]**.
4 Press **OK**.
↳ All channels display in the channel grid.

Note

- All favourite channels are marked by an asterisk in the channel grid.

Add a channel to a favourite list

1 When watching TV, switch to the channel you want to add to a favourite list (see 'Switch channels' on page 8).
2 Press ▲▼◀▶ to select a channel to add to a favourite list.
3 Press **OPTIONS**.
↳ The channel options menu appears.
4 Press ▲▼ to select **[Mark as favourite]**.
5 Press **OK**.
↳ The favourite lists appear.
6 Press ▲▼ to select a favourite list to add the channel to.
7 Press **OK**.
↳ The channel is added to the favourite list.

Tip

- When watching TV, press **OPTIONS** > **[Mark as favourite]** to save the current channel into a favourite list.

Remove a channel from a favourite list

Note

- Select the favourite list to edit, before removing a channel.

1 When watching TV, press **OK** to display the channel grid.
2 Press **OPTIONS**.
↳ The channel options menu appears.
3 Press **OK** to enter **[Show favourite ch.]**.
4 Press ▲▼ to select a favourite list and press **OK** to confirm the choice.
5 Press ▲▼◀▶ to choose the channel that you wish to remove from the list.
6 Press **OPTIONS**.
7 Press ▲▼ to select **[Unmark as fav.]**.
8 Press **OK**.
↳ The channel is removed from the favourite list.

Downloaded From TV-Manual.com Manuals
Downloaded from www.Manualslib.com manuals search engine

NUMBERING TRACKS

The track numbers may be added automatically (auto mode) or manually (manual mode).

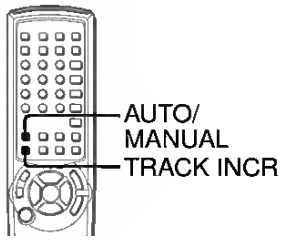

Auto mode

Auto mode can be used with either digital or analog recording.
The auto mode will add track numbers automatically, in one of two ways.

- When track data is present from a digital recording, it will be carried over to the new copy disc.
- In the auto mode for recordings from an analog source or a digital source with no track data, the track number will be increased when the unit receives silence for 3 seconds. The unit will also go into the pause mode until the input source resumes.

Manual mode

For digital or analog recordings, the track numbers may be added at any time by pressing **TRACK INCR** on the remote control.

To switch the numbering mode

Press **AUTO/MANUAL** repeatedly. When auto mode is selected, "AUTO" lights.

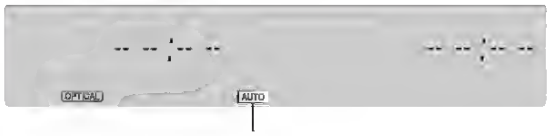

"AUTO" lights

En

Downloaded from www.Manualslib.com manuals search engine

DOLBY PRO LOGIC

The Dolby Pro Logic feature and the center and rear speakers (standard) assure full-scale home theater sound. When playing back laser discs or video software that have been recorded in Dolby Surround, astonishingly realistic sound surrounds the listener to create a new level of audio/visual entertainment. Independent control of the four sound channels allows the listener to enjoy the same type of sound reproduction experienced in movie theaters. Voices are reproduced in the front and center sound field, while ambient sounds like cars and crowds are reproduced on all sides of the listener for an incredibly lifelike audio/video experience. Please read the following carefully to "tune" the system's output to match the characteristics of your listening space.

Check the following:

- **Before using the DOLBY PRO LOGIC, adjust the proper balance of speaker sound levels.**
- Make sure the supplied speakers are properly connected and positioned. (See page 3)
- Make sure the TV set and video unit are properly connected. (See page 4)
- Make sure the laser disc, video tape, etc., support DOLBY SURROUND.

ADJUSTING SPEAKER LEVEL BALANCE

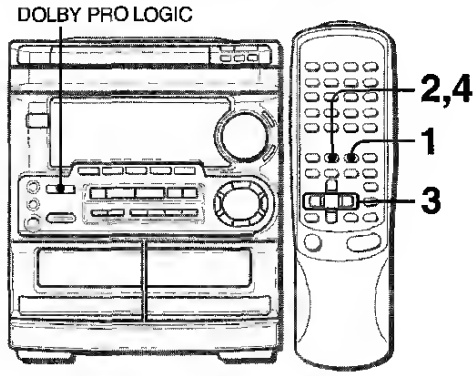

The unit is equipped with a built-in test signal generator called a noise sequencer for easy balance adjustment of all four channels. The sequencer outputs a noise signal that "travels" from channel to channel, enabling the simple adjustment of sound level to achieve, at the listening position, the same apparent loudness from each channel.

Use the remote control.

1 **Press the DOLBY PRO LOGIC button to select NORMAL.**

NORMAL lights up in red.

If PHANTOM or 3CH - LOGIC lights up in red, press the DOLBY PRO LOGIC button repeatedly until NORMAL is selected.

2 **Press the MANUAL SELECT (TEST) button and hold it down for about four seconds until "L" flashes.**

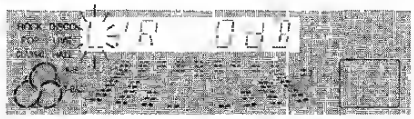

A noise signal is sent to each channel in turn in the following sequence.

→ **L**: Left speaker ——→ **CEN**: Center speaker →
← **SUR**: Surround speakers ←— **R**: Right speaker ←

3 **Adjust the sound level of the center and the surround speakers.**

While "CEN" or "SUR" is displayed, press the DOWN ⏮ or UP ⏭ button to adjust the volume of the center or surround speakers to match the level of the left and right speakers.

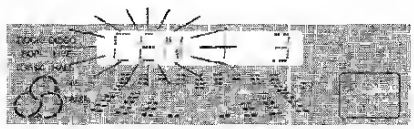

To adjust the balance between the left and right speakers, see page 6. At this time, the DOLBY PRO LOGIC mode should be canceled by pressing the DOLBY PRO LOGIC button until the "P-OFF" is displayed.

4 **Press the MANUAL SELECT (TEST) button again to stop the noise signal.**

Downloaded from www.Manualslib.com manuals search engine

Empty the condensate container

Caution! The condensate is not suitable for drinking or for use with foodstuffs.

Make it a habit to empty the condensate container after every drying process. This avoids automatic interruption of the drying process when the condensate container is full.

☞ Grasp the handle flap of the condensate container and pull-out the latter completely.

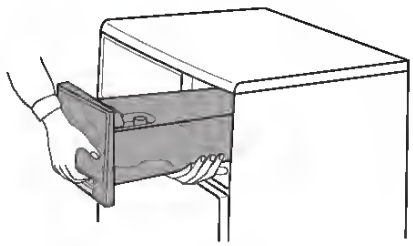

☞ Push the cover of the condensate container to the side and pour-out the condensed water.

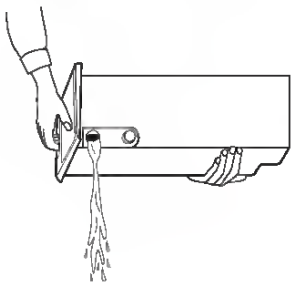

☞ Re-insert the condensate container into the operator control mask.

Information on illumination of the EMPTY WATER display:
The EMPTY WATER display remains illuminated for a few seconds more after the condensation container is emptied.

If the drying cycle has not yet ended:

☞ Press the START button to continue the drying cycle.

The condensate container has a capacity of approx. 3.8 litres. This is sufficient for a laundry fill of 5kg which has been centrifuged at 800 revolutions per minute.

Downloaded from www.Manualslib.com manuals search engine

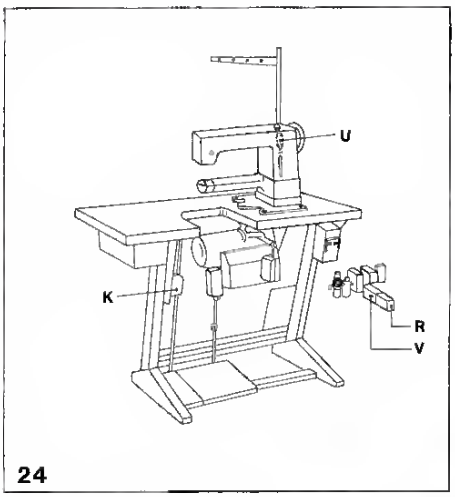

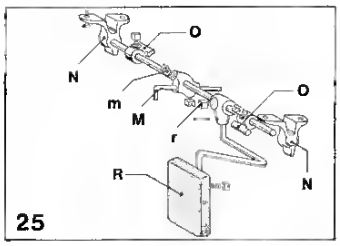

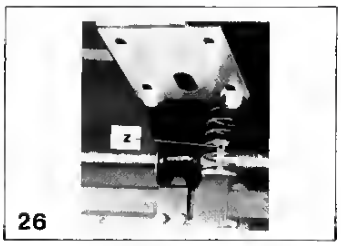

Downloaded from www.Manualslib.com manuals search engine

Connecting the Projector for Wireless Function

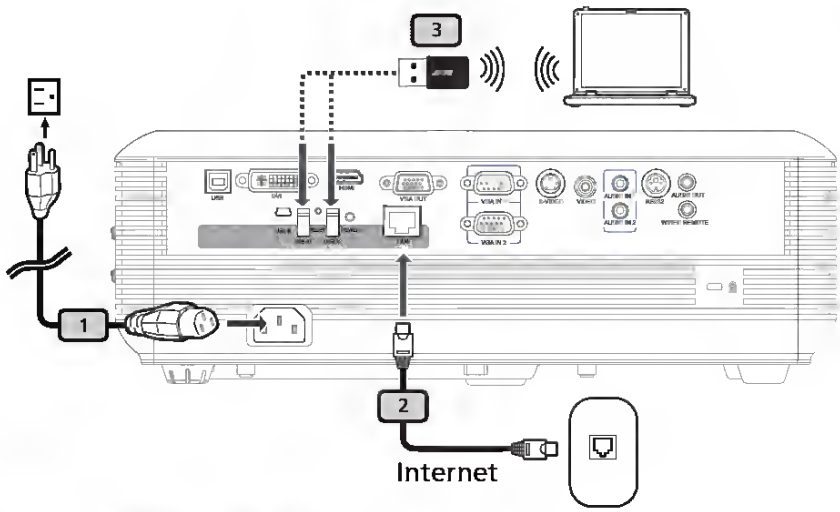

#	Description
1	Power cord
2	LAN cable
3	USB WiFi adapter

Note: For P5271i only

Downloaded from www.Manualslib.com manuals search engine

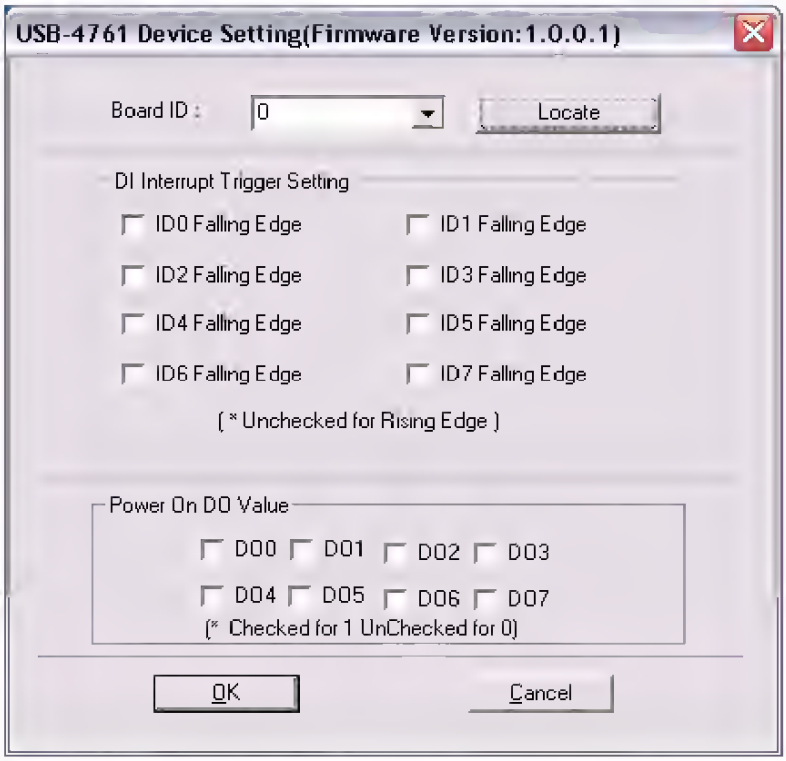

Figure 2.5: The Device Setting Dialog Box

Note: *Please refer to the software manual* ***Start/Programs/Advantech Automation/Advantech Device Manager/Device Driver's Manual*** *for the firmware download utility guidance and further information.*

2.5 Device Testing

Following the *Setup* and *Configuration* procedures to the last step described in the previous section, you can now proceed to test the device by clicking the ***Test*** Button in the *I/O Device Installation* dialog window. In the *Device Test* dialog window, you are free to test the functions of USB-4761 on Digital input and Digital output tabs.

Downloaded from www.Manualslib.com manuals search engine

Connecting with a cable

Built-in network feature

Plug one end of a network cable into the network port on your computer, and the other end into a port on your router. (Refer to the image below.) Then, you'll be ready to get online.

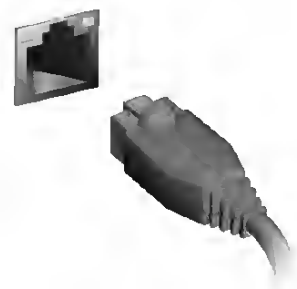

Connecting to a cellular network

If your computer has a SIM slot, you can connect to the internet using a cellular phone network. To do this, you must have a compatible SIM card and a data contract with your cellular provider. Contact your cellular provider for more information on connecting to the internet using a cellular network.

Downloaded from www.Manualslib.com manuals search engine

English

- WXGA series

If the projector is 2.0 m from the screen, good image quality is possible for image sizes between 55" and 60".

Note: Remind as below figure, the space of 91 cm height is required when located at 2.0 m distance.

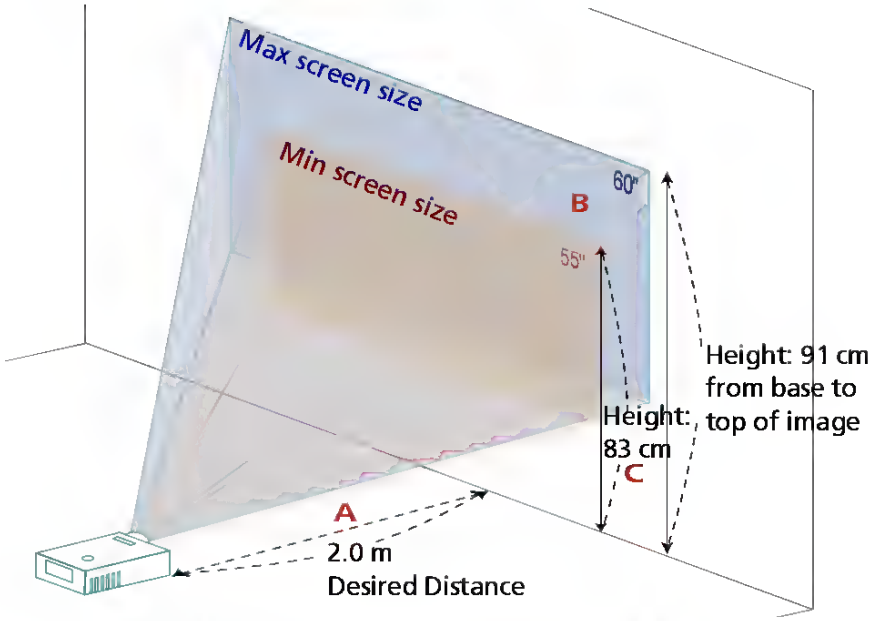

Desired Distance (m) <A>	5creen size (Min zoom)		Top	5creen size (Max zoom)		Top
	Diagonal (inch) <8>	W (cm) x H (cm)	From base to top of image (cm) <C>	Diagonal (inch) <8>	W (cm) x H (cm)	From base to top of image (cm) <C>
1	27	59 x 37	41	30	65 x 40	45
1.5	41	88 x 55	62	45	97 x 60	68
2	55	118 x 74	83	60	129 x 81	91
2.5	68	147 x 92	103	75	161 x 101	113
3	82	176 x 110	124	90	194 x 121	136
3.5	96	206 x 129	145	105	226 x 141	159
4	109	235 x 147	165	120	258 x 161	181
4.5	123	265 x 165	186	135	290 x 181	204
5	137	294 x 184	207	150	323 x 202	227
6	164	353 x 221	248	180	387 x 242	272
7	191	412 x 257	289	210	452 x 282	317
8	218	471 x 294	331	240	516 x 323	363
9	246	529 x 331	372	270	581 x 363	408
10	273	588 x 368	413	300	645 x 403	453

Zoom Ratio: 1.1x

Downloaded from www.Manualslib.com manuals search engine

Adjustments

LEVEL ADJUSTMENT

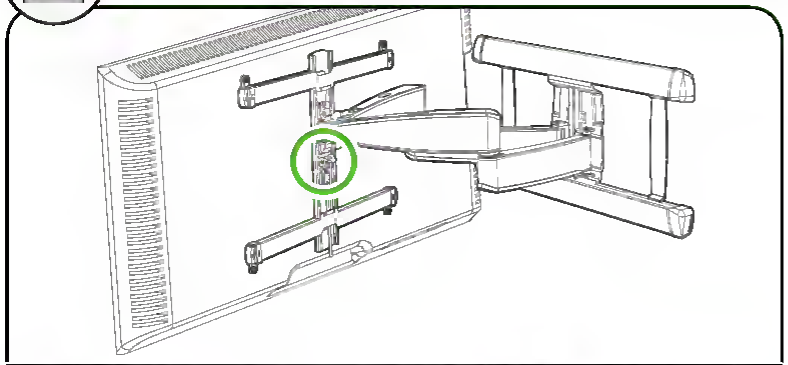

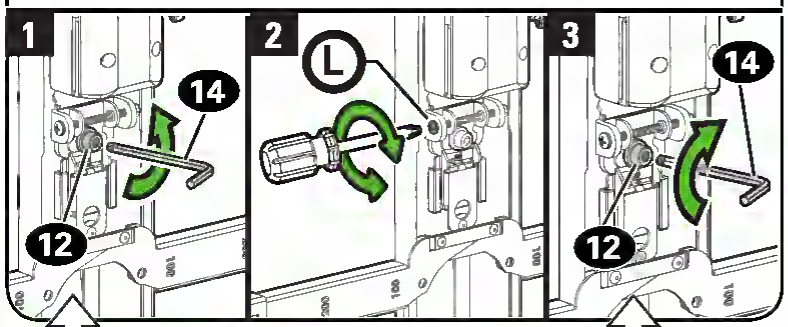

CAUTION:

Screw 12 MUST be loosened before turning screw L.

CAUTION: Avoid potential personal injury or property damage!

Always make sure your securement screw 12 is tightened, so the TV is securely fastened to the arm assembly 11.

TILT ADJUSTMENT

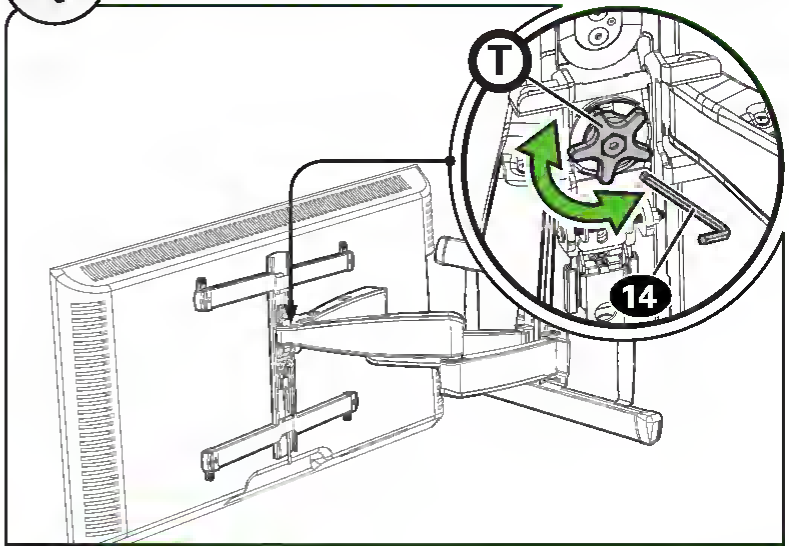

NOTE:

If you do not intend to adjust the tilt for different viewing locations, you can tighten the tilt tension knob T, to prevent unwanted movement. If needed, use hex key 14 to tighten more firmly.

Your TV should adjust easily when moved, then stay in place.

Adjust the tilt tension knob T if your TV naturally tilts up or down.

USING THE WIRELESS GAME CONTROLLER

The Game Controller transmits to the ADV49 with two infrared transmitters located on the front of the Game Controller.

The Game Controller must be pointed toward the unit for correct operation.

Press the source button on the remote control or the unit until "GAME" is displayed.

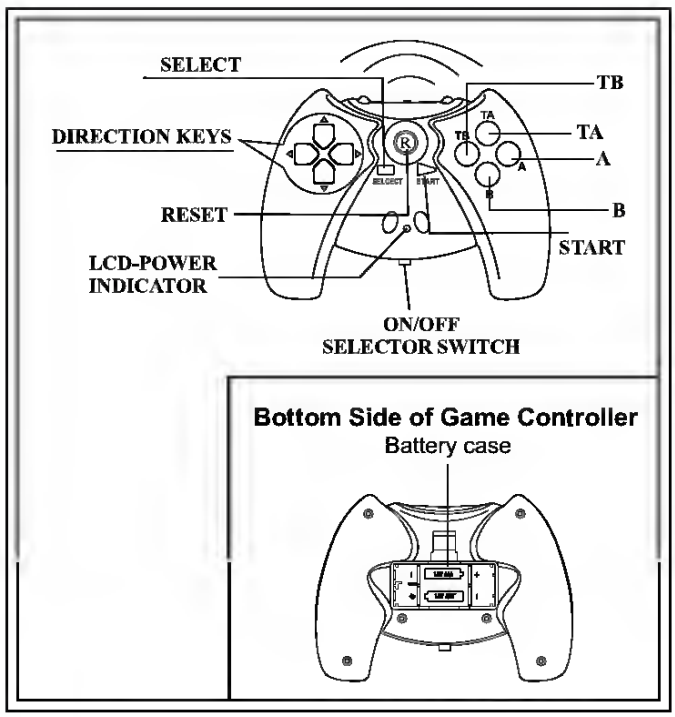

GAME CONTROLLER FUNCTIONAL DESCRIPTION

1. Install two AAA batteries in the Game Controller. Observe the correct polarity.
2. Use the ON/OFF selector switch to turn on the Game Controller. A list of ten games will be displayed.
3. Use the A button (page up) or B button (page down) to display the three pages of games (1-10, 11-20, 21-30). Then use the direction buttons to move the arrow to the desired game. Press Start to select the game.
4. Press Start to begin the game. Press Start again at any time to pause the game.
5. Press RESET to return to the game list.
6. Use the ON/OFF selector switch to turn off the Game Controller after use.

Downloaded from www.Manualslib.com manuals search engine

Playing an Audio CD and MP3 discs

The DVD Player can play MP3 formatted recordings on CD-ROM, CD-R, or CD-RW discs.
Before playing MP3 recordings, read the notes on MP3 Recordings on page 31.

1 Insert a disc and close the tray.
The menu appears on the TV screen.

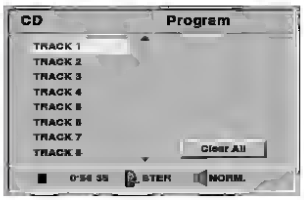

Audio CD menu

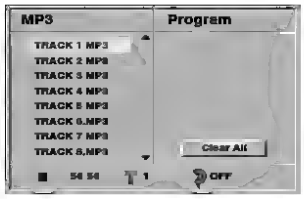

MP3 menu

2 Press ▲/▼ to select a track then press PLAY.
Playback starts.
During playback, the current track's elapsed playing time will appear on the display.
Playback will stop at the end of the disc.

3 To stop playback at any other time, press STOP.

Pause CD MP3

1 Press PAUSE during playback.
2 To return to playback, press PLAY or press PAUSE again.

Moving to another Track CD MP3

- Press ⏮ or ⏭ briefly during playback to go to the next track or to return to the beginning of the current track.
- Press ⏮ twice briefly to step back to the previous track.
- In case of audio CD, to go directly to any track, enter the track number using the numbered buttons (0-9) during playback.

Repeat Track/All/Off CD MP3

1 To repeat the track currently playing, press REPEAT.
The Repeat Track icon appears on the menu screen.
2 To repeat all tracks on a disc, press REPEAT a second time.
The Repeat ALL icon appears on the menu screen.
3 To cancel Repeat mode, press REPEAT a third time.
The Repeat OFF icon appears on the menu screen.

Search CD

1 Press and hold ⏮ or ⏭ for about two seconds during playback.
The player will now go into SEARCH mode.
2 Press and hold ⏮ or ⏭ repeatedly to select the required speed: ◀◀X2, ◀◀X4, ◀◀X8 (backward) or ▶▶X2, ▶▶X4, ▶▶X8 (forward).
3 Search speed and direction are indicated on the menu screen.
4 To exit SEARCH mode, press PLAY.

Random CD

1 Press RANDOM during playback or when playback is stopped.
The unit automatically begins Random Playback and "RAND." appears on the menu screen.
2 To return to normal playback, press RANDOM repeatedly until "RAND." disappears on the menu screen.

Repeat A-B CD

To repeat a sequence.
1 During disc playback, press A-B at your chosen starting point.
The Repeat icon and "A -" appears on the menu screen.
2 Press A-B again at your chosen end point.
The Repeat icon and "A B" appears on the menu screen, and the sequence begins to play repeatedly.
3 To exit the sequence and return to normal play, press A-B again.
The Repeat icon and "OFF" appear on the menu screen.

3D Surround CD

This unit can produce a 3D Surround effect, which simulates multi-channel audio playback from two conventional stereo speakers, instead of the five or more speakers normally required to listen to multi-channel audio from a home theater system.

1 Press DISPLAY or AUDIO during playback.
2 Press ◀/▶ to select "NORM." or "3D SUR".
3 Press ▲/▼ repeatedly until the desired sound is selected.

Changing the Audio Channel CD

Press AUDIO repeatedly during playback to hear a different audio channel (STEREO, LEFT, or RIGHT).

You can run Photo Express by either double-clicking the icon on your desktop or from the shortcut in the Windows "Start" menu. After Photo Express is launched, the following main screen will appear:

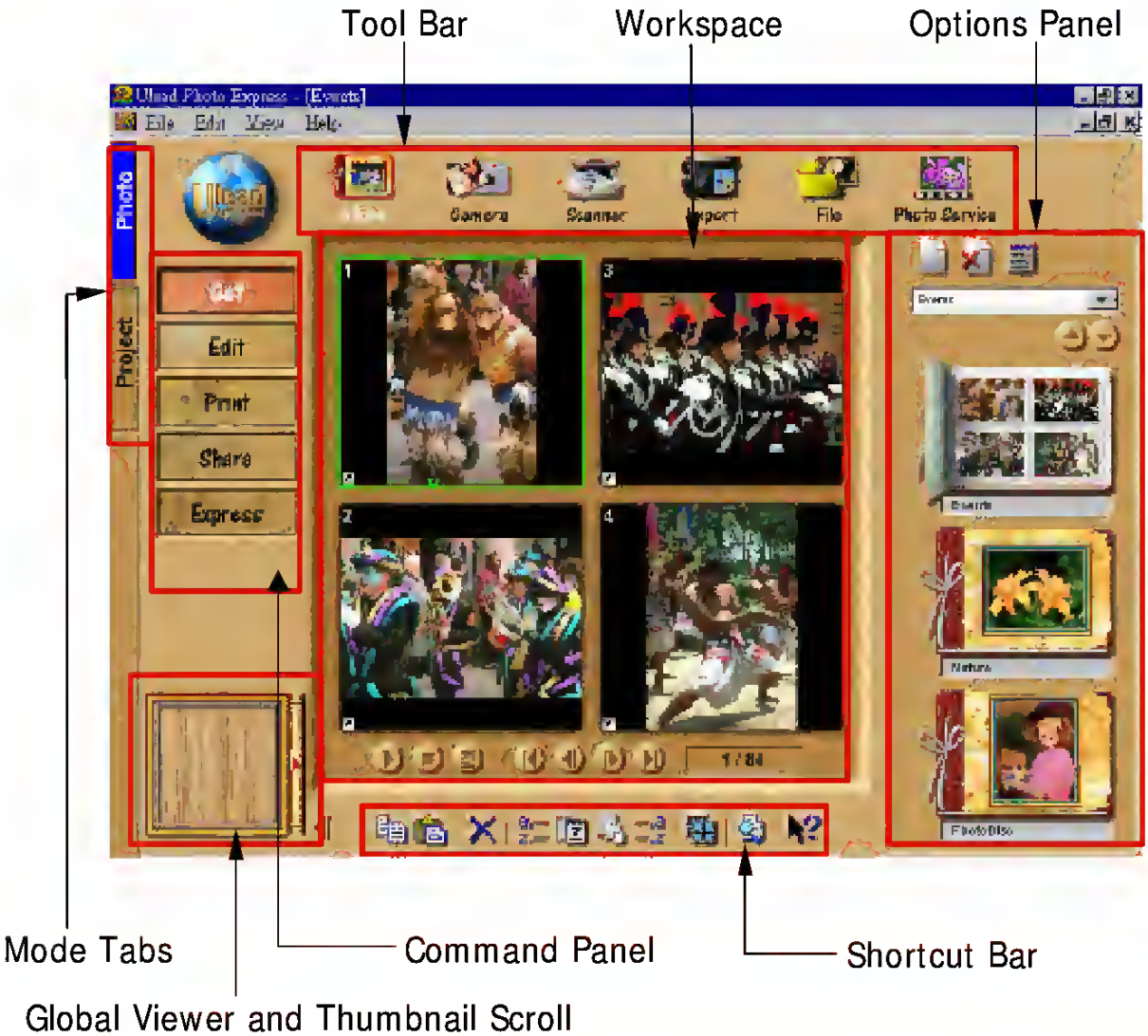

Downloaded from www.Manualslib.com manuals search engine

Para cancelar el temporizador

Para cancelar el programa 1, presione TUNE ▼ o TUNE ▲ repetidamente hasta que la indicación "PRG1 OFF" destelle en el paso 2.
Para cancelar el programa 2, presione TUNE ▼ o TUNE ▲ repetidamente hasta que la indicación "PRG2 OFF" destelle en el paso 4.

Notas

- Cuando se programan dos programas, asegúrese de que no se superponen.
- Aunque el aparato esté en otro modo que no sea el modo de radio, el aparato se conmuta al modo de radio y se sintoniza automáticamente el programa de radio programado a la hora programada. Cuando se termina el programa, el aparato vuelve automáticamente al modo anterior.
- Cuando se activa esta función, TUNE ▼/▲, A.ME, LO y los botones de números programados no funcionan para sintonizar las emisoras.
- Aunque se está escuchando un programa de radio con esta función, si se presionan los siguientes botones se conmuta el aparato al otro modo:
  — Presione BAND para cambiar el aparato al modo de radio.
  — Presione DIR para cambiar al modo de reproducción de cinta.
  — Presione CD para cambiar al modo de reproducción con cambiador de discos compactos.

  Si se cambian los modos con estos botones, el aparato no se desconecta a la hora de desconexión del temporizador.
  Para conmutar al modo CD/MD IN presione DIR, CD o BAND antes de conectar un tocadiscos de discos compactos/minidiscos portátil, etc. en la toma CD/MD IN.

REPRODUCCION DE LA CINTA

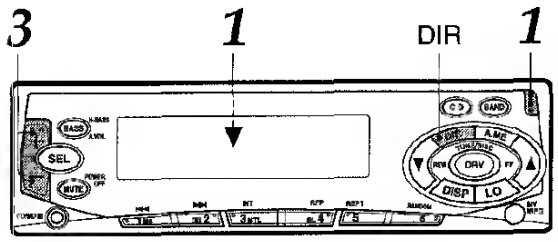

1 **Presione OPEN para abrir el panel frontal y coloque una cassette.**
Empieza a reproducir en el sentido en el que se estaba reproduciendo anteriormente.

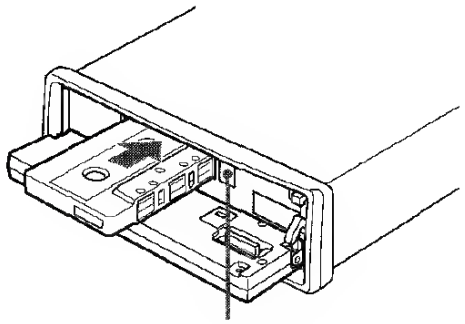

Botón ⏏ (expulsión)

2 **Cierre el panel delantero.**

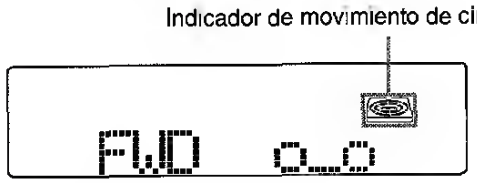

3 **Ajuste el volumen con +/−.**

Notas

- Si ya había una cassette colocada, presione DIR para empezar a reproducir.
- Asegúrese de cerrar el panel delantero después de colocar o expulsar una cassette.

continuación

Downloaded from www.Manualslib.com manuals search engine

MOVIE MODE

Recording Movie Clips

This mode allows you to record movie clips with sound via built-in microphone.

1. Rotate the mode dial to 🎥 (Movie Mode) and turn your camera on by pressing the power switch.
2. Mode-dial Help information will be displayed on the LCD monitor. This is a brief guide which disappears in a few seconds. If you wish to refer to this information again, press the OK button.
3. Compose your subject within the focus frame
4. Press the shutter release button to start recording.
5. To stop recording, press the shutter release button again.

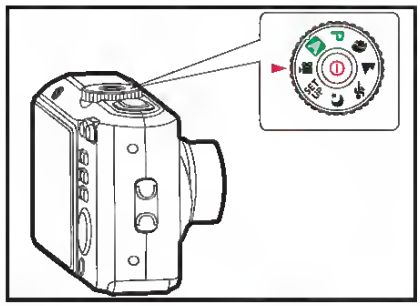

- The optical zoom function (3X) can be activated before you start recording the movie clips
- The digital zoom function can be activated before and during the recording
- Pressing the OK/|◻| button switches the LCD monitor screen display mode Each time you press the OK/|◻| button, the display changes in the following order: Normal Display → No Icons → LCD Off.
- To enable/disable Mode-dial Help function, set the [Option-Mode-dial Help] to [On]/[Off] in all modes.

Downloaded from www.Manualslib.com manuals search engine

Technical Specifications

Standards

- IEEE 802.11g
- IEEE 802.11
- IEEE 802.11b
- IEEE 802.3
- IEEE 802.3u

Device Management

- Web-Based Internet Explorer v6 or later; Netscape Navigator v6 or later; or other Java-enabled browsers
- DHCP Client

Wireless Operating Range

- Indoors – up to 328 feet (100 meters)
- Outdoors – up to 1312 feet (400 meters)

Temperature

- Operating: 32ºF to 149ºF (0ºC to 55ºC)
- Storing: 4ºF to 167ºF (-20ºC to 75ºC)

Humidity:

- 95% maximum (non-condensing)

Safety and Emissions:

- CE/FCC, UL

Wireless Frequency Range:

- 2.4GHz to 2.4835GHz

Wireless Data Rates with Automatic Fallback:

- 108Mbps(***SuperG Mode***) all wireless devices must have Super G enabled.
- 54 Mbps
- 48 Mbps
- 36 Mbps
- 24 Mbps
- 18 Mbps
- 12 Mbps
- 11 Mbps
- 9 Mbps
- 6 Mbps
- 5.5 Mbps
- 2 Mbps
- 1 Mbps

Downloaded from www.Manualslib.com manuals search engine

dálkovým ovládáním anebo prostřednictvím funkce ESP (Energy Saving Programmability, čili Režimem úspory energie, řídícím maximální nepřetržitou dobu sledování umožněnou kontrolním systémem).
Při zapnutí "STANDARD" se TV zapne v předešlém stavu, v ON nebo v Stand-by (Pohotovostním stavu).
Při zapnutí "STAND-BY" se TV vždy zapne v pohotovostním stavu.

- **Step Tuning (YES/NO)**
  (Ladění krok za krokem) (ANO/NE)
  Zvolíte-li YES, TV předvolby (od 1 do 9) se naladí ihned po stisknutí jedné číslice.
  Zvolíte-li NO, předvolby se naladí teprve po zmizení spojovací čárky.

- **Digit Time-out (Časová prodleva číslice)**
  Je maximální čas k dispozici pro zavedení druhé číslice pro zvolení TV předvoleb od čísla 10 nahoru.

- **Program Display (Zobrazení předvolby)**
  Hodnoty označení předvolby mohou být: Číslo, Označení, Všechno, Nic.

- **Keyboard Lock (Blokování klávesnice)**
  Funkce menu Keyboard Lock v komerčním režimu dezaktivuje funkci ovládání hlasitosti a předvoleb z klávesnice TV.

- **Free protected programs**
  (Vyloučení ochrany)
  Touto položkou může být vyloučena ochrana u všech chráněných programů. Pokud je "free protected programs" nastaveno na "YES", všechny programy jsou pro uživatele zpřístupněny; pokud je nastaveno na "NO", lze nastavit chráněné programy, ale bez obrazu a zvuku.

- **ESP**
  Energy Saving Programmability Mode (ESP) (Režim úspory energie) řídí maximální nepřetržitou dobu sledování umožněnou kontrolním systémem.
  Umožňuje přístroji systému omezit dobu, po níž televizor zůstane aktivován, když host opustí svůj pokoj.
  Funkce menu ESP je označena jako "ESP" a její platné hodnoty jsou 00 - 99 (v hodinách).
  Hodnota 00 znamená OFF (Vypnuto).

- **Interface (Rozhraní)**
  Tato položka je přítomna pouze u přístrojů "systému" a používá se pro aktivování a dezaktivování komunikace s DCM (Data Communication Module - čili Modul datové komunikace).

- **Audío / Vídeo Mute**
  (Potlačení zvuku / obrazu)
  Funkce menu Potlačení zvuku/obrazu určuje, zda obraz a zvuk musejí být potlačeny, pokud vyladěný kanál nemá signál (blue, black, OFF) (modrý, černý, Vypnuto).

- **Auto Scart (Automatický vstup Scart)**
  Aktivuje/dezaktivuje automatické přepínání na vnější vstup Scart.

- **Welcome Message (Uvítací zpráva)**
  Stiskněte kurzor vpravo/vlevo pro zobrazení vstupního menu:
  Welcome Message, Line 1 (Řádka 1) a Line 2 (Řádka 2).
  Kurzorem nahoru/dolů můžete nastavit písmo zprávy.

- **Program Guide (Seznam předvoleb)**
  Tato položka ativuje/dezaktivuje v "seznamu" nebo na "stránce" čísla předvoleb s připojeným označením.

- **Reminder (K zapamatování)**
  Tato funkce menu je označena jako "REMINDER" a její stavy jsou "YES" a "NO".

- **Security (Zabezpečení)**
  Funkce menu "SECURITY" umožňuje uživateli nastavit jeden ze dvou stavů "HIGH" (Vysoký) nebo "STANDARD". Nastavený stav je "STANDARD".
  Když se přístroj nachází ve stavu Security High Mode, menu nastavení je přístupné pouze prostřednictvím dálkového ovládání Institutional, model T374AH.
  Když se přístroj nachází ve stavu Security Standard Mode, menu nastavení je přístupné normálním kurzorem "guest" dálkového ovládání použitím za sebou jdoucích příkazů (3 1 9 7 5 3 MUTE).

Downloaded from www.Manualslib.com manuals search engine

Monitor TV - Conexiones

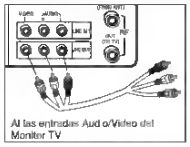

Al las entradas Aud o/Video del Monitor TV

Los equipo de televisión del tipo monitor ofrecen un sonido mejorado e imágenes de calidad por sobre el promedio de las televisores porque los primeros reciben las señales de audio y video directamente desde el DVD-VCR a traves de las entradas de la linea.

NOTA: Una televisor tipo monitor no es lo mismo que el monitor de una computadora.

1 Conectar VCR al Monitor TV
Conectar cables RCA desde los jacks de Audio/Video Line Out en el panel posterior del DVD-VCR a la entrada Audio/Video Line de su monitor TV

2 Poner TV a modo auxiliar
Programe su monitor TV para Aux "(auxiliar) "Video (video) o Line (linea)
Refiérase al manual de propietario de su monitor para los mantajes correctos

3 La conexion se completo
NOTA. Con esta conexión el botón TV/VCR no tiene efecto Es Como si el botón TV/VCR estuviera siempre puesto en VCR

Conectar Otros Equipos de Video

Puede conectar una amplia variedad de equipos de audio/video a su DVD-VCR, incluyendo:

- ***Un VCR adicional***
- ***Un reproductor laser de discos***
- ***Reproductor DVD***
- ***Camara portatil***
- ***Receptor satelital***
- ***Juegos de video***

Dado que todos estos elementos utilizan esencialmente las mismas conexiones, se hace una sola descripcion que se aplica a todas.

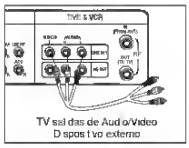

TV sal das de Aud o/Video D spos t vo externo

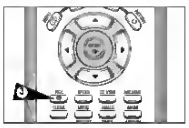

1 Conectar Device al DVD-VCR
Conectar cables RCA desde las salidas de las líneas de Audio y de Video de su Dispositivo externo a las entradas de líneas de Audio y de Video en el panel posterior o frontal del DVD-VCR

2 Dispositivo para ver
Encienda su dispositivo externo. luego oprima el botón "INPUT SEL hasta que la reproducción desde Línea 1 (entradas del panel posterior) o Línea 2 (entradas del panel frontal) aparece en la pantalla de su TV

3 Dispositivo para grabar
Primero encienda su dispositivo externo Luego oprima el botón de INPUT SEL Hasta que la reproducción desde Línea 1 (entradas del panel posterior) o desde la Línea 2 (entradas del panel frontal) aparezca en la pantalla de su TV Luego oprima "Record" (grabar) en el sistema VCR

4 Grabacion cronometrada desde un dispositivo
Seleccione Línea 1 o Línea 2 como su fuente de grabación en el menu de registros de tiempo
Todos los otros parámetros de cronometraje deberán estar definidos en la manera usual

Downloaded from www.Manualslib.com manuals search engine

Step 4b Log in to your router's configuration page from the web browser and click on **Wireless**. Then click **Wireless security**. Make sure that the Wi-Fi Protected Setup **Enable** box is checked. Click the **Add Wireless Device Wizard** button.

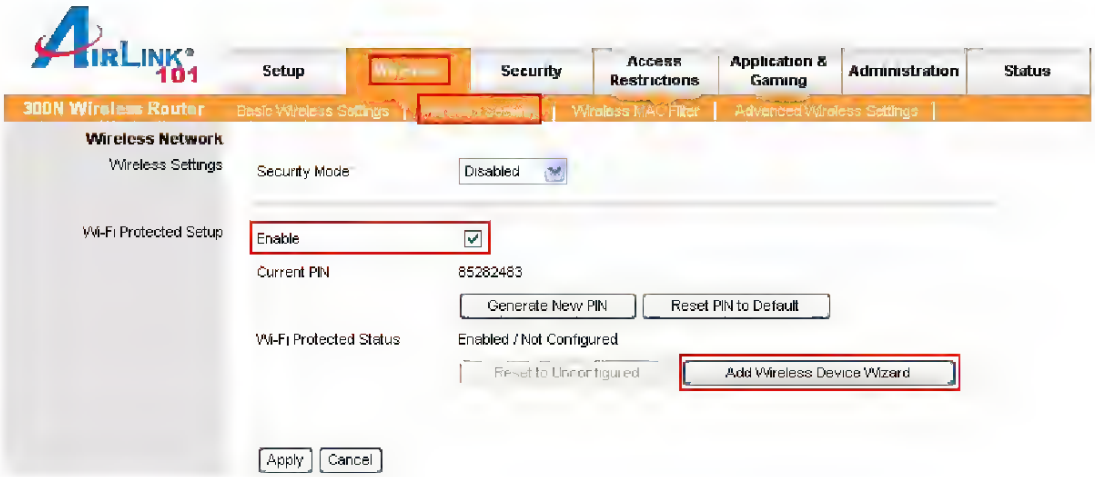

Step 4c Enter the Pin Code in the **Pin Number** box and click **Connect**.

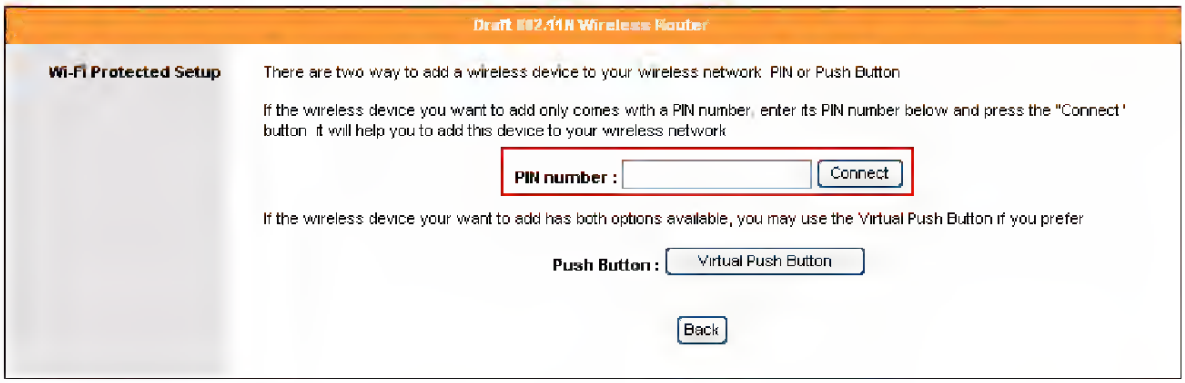

After a few moments both the router configuration screen and the adapter configuration screen should show a message telling you that you are connected.

Step 4d Click **Continue** on the router configuration screen.

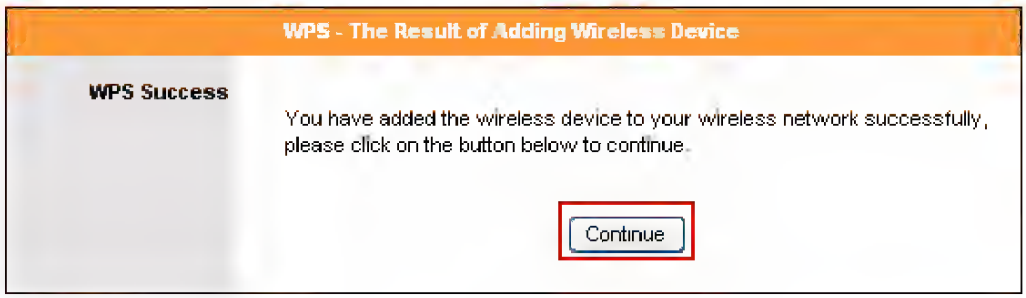

Downloaded from www.Manualslib.com manuals search engine

Step 2 Choose the option to **Back up files and settings** and click Next.

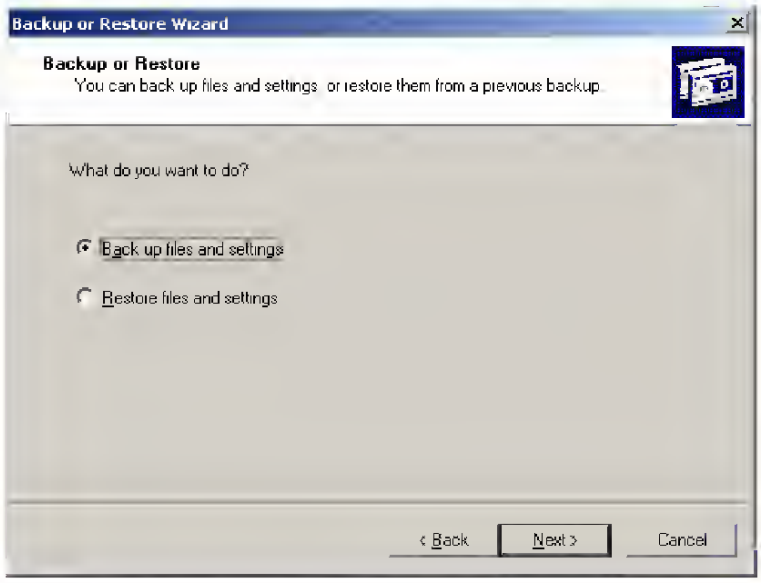

Step 3 Choose the fourth option to **Let me chose what to back up** and click Next.

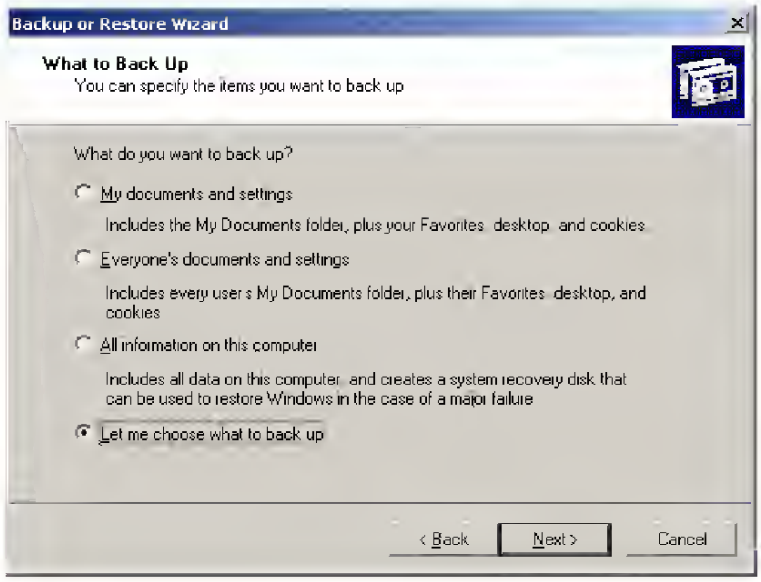

Downloaded from www.Manualslib.com manuals search engine

AT2605-DTV

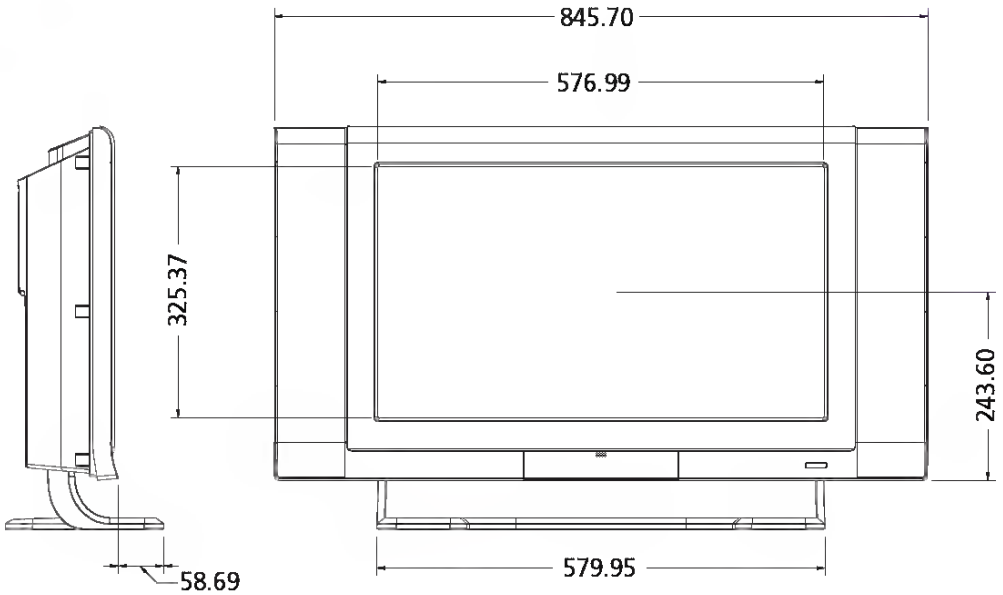

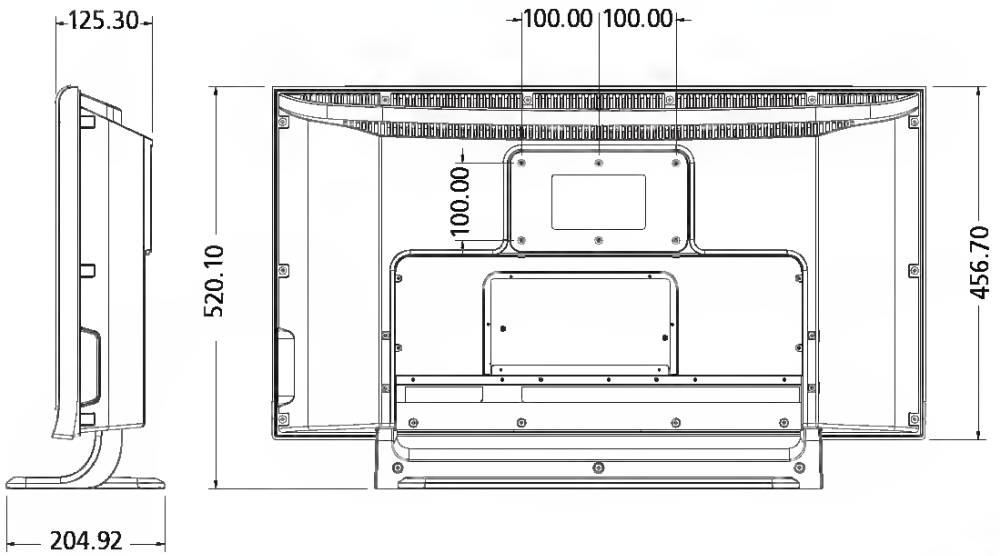

Unit: mm

4.in.1 05 series 0303.indb 36 3/8/2006 2:03:54 PM
Downloaded from www.Manualslib.com manuals search engine

Introduction

This section will introduce wireless projection function for this projector. The wireless projection function is only available for the model which is equipped with integrated Acer Wireless Presentation Gateway (WPG) module. Acer WPG enables multiple users to connect to an Acer projector wirelessly. This eliminates the need to plug and unplug cables, enabling more efficient use of meeting time, especially when there is more than one presenter in a meeting.

To perform wireless projection, you have to change the input source type to "Wireless" by pressing the "Wireless" button on the remote control or the "Source" button on the control panel or remote control.

System Requirements:

- Operating system: Windows® 2000 or Windows® XP
- CPU: Intel® Pentium® III at 750 MHz or equivalent with 128 MB of RAM
- Wireless LAN: IEEE 802.11b/g enabled
- Internet Browser: Internet Explorer 5.0 or above

I/O Interface:

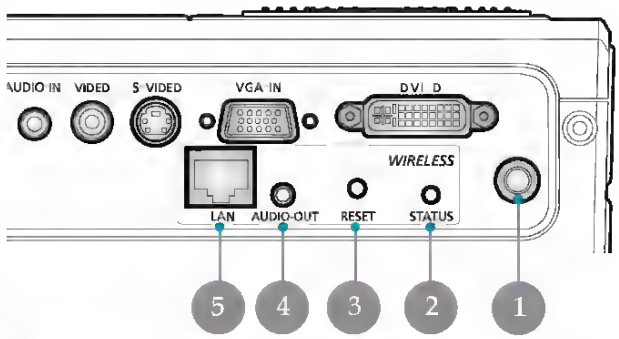

No.	Item	Description
1	Antenna connector	For attaching the external antenna.
2	Status LED	Indicates the WPG's status.
3	Reset button	A quick press on the the Reset button will reset the WPG without changing any user's settings. Press and hold Reset button for more than 4 seconds to reset the WPG to its factory default settings.
4	Audio-out jack	For outputting audio signals received wirelessly from the PC.
5	RJ-45 Ethernet jack	For connecting the WPG to the Internet via a LAN.

Downloaded from www.Manualslib.com manuals search engine

CRAFTSMAN ROTARY LAWN MOWER - - MODEL NUMBER 917.379810

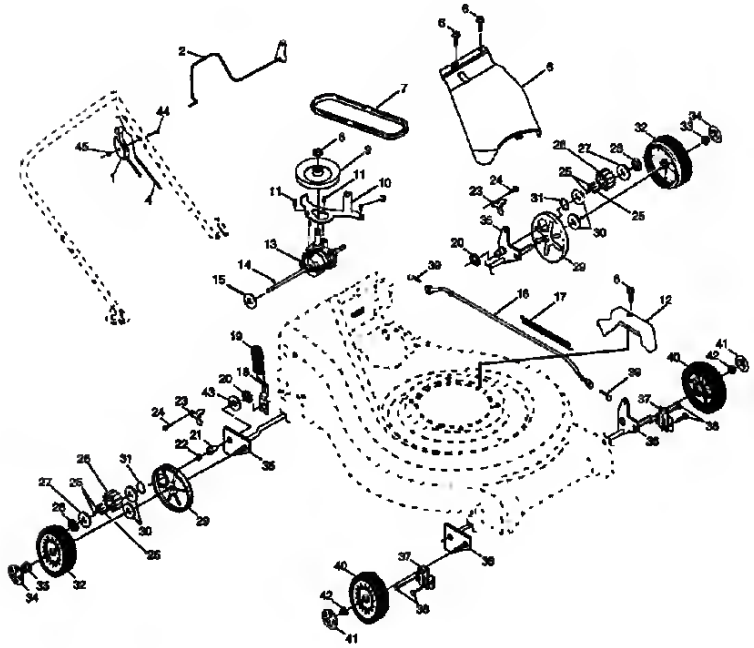

Downloaded from www.Manualslib.com manuals search engine

What to do if ...

.... the cooking zones don't work?

☞ Check whether
- the appropriate cooking zone has been switched on,
- the mains fuse (fuse box) has blown or the cooker circuit breaker (at the household power distribution box) has tripped.

.... the oven does not heat up?

☞ Check whether
- the appliance has been switched on,
- all the necessary settings have been made,
- the mains fuse (fuse box) has blown or the cooker circuit breaker (at the household power distribution box) has tripped.

If the circuit breaker trips several times, please contact an approved electrician.

.... the oven lighting goes off?

☞ Replace the light bulb in the oven (see Cleaning and care).

Information for appliances with a metal front:

ⓘ Due to the cold front of your appliance the inner door glass may steam over briefly if you open the door during or shortly after baking or roasting.

If you call in customer service to resolve a problem listed in these notes, or to rectify an error in the operation of the appliance, the customer service engineer's visit might not be free of charge, even during the warranty period.

Should you still have problems after reading this information, please contact your specialist dealer or customer service.

⚠ **Warning:** Repairs to the appliance should only be carried out by qualified specialists. Improperly effected repairs may result in considerable risk to the user. If your appliance needs repairing, please contact your specialist dealer or customer service.

Downloaded from www.Manualslib.com manuals search engine

Downloaded from www.Manualslib.com manuals search engine

2 PREDATORSENSE

PredatorSense (DT) is an Acer proprietary utility to enhance the user experience of Gaming products on Microsoft Windows 10.

The central idea of this utility is to provide a user interface to easily control fan speed, RGB chassis and also display system information.

PredatorSense features

- **Fan speed control**
- **System information dashboard**
- **RGB chassis**

To set up the PredatorSense application (Windows 10):

1. From the *Start* menu, select **All apps**.
2. Select **Acer**.
3. Select **PredatorSense**.

Alternatively, you can double-click the PredatorSense desktop shortcut to run the application.

Downloaded from www.Manualslib.com manuals search engine

Downloaded from www.Manualslib.com manuals search engine

GRABACION CON EDICION AI

Para comprobar el orden de los números de las canciones programadas
Antes de grabar, pulse el boton EDIT/CHECK para seleccionar la cara A o la B, y pulse repetidamente el botón ◀◀ o ▶▶ → A

VISUALIZACION
① Cara de la cinta
② Número del programa
③ Números de las canciones programadas
④ Número de canción

Para añadir canciones de otros discos al programa de edición
Si queda tiempo en la cinta despues del paso 5 de la página 41, usted podrá añadir canciones de otros discos que se encuentren en el compartimiento de discos compactos.
1 Pulse el botón EDIT/CHECK para seleccionar la cara A o B.
2 Pulse uno de los botones DISC DIRECT PLAY para seleccionar un disco.
3 Pulse los botones numéricos para seleccionar canciones.
AI se apaga y PRGM empieza a parpadear en el visualizador.
Una canción cuyo tiempo de reproducción sea superior al tiempo restante no podrá programarse.
4 Repita los pasos 2 y 3 para añadir más canciones.

Tiempo de las cintas de cassette y tiempo de edición
El tiempo de grabacion de los cassettes es por lo general un poco más largo que el tiempo de grabación especificado en sus etiquetas. Esta unidad puede programar canciones para utilizar ese tiempo extra. Cuando el tiempo total de grabacion sea un poco más largo que el tiempo de grabación especificado en el cassette, el visualizador mostrará el tiempo extra (sin el signo menos) en lugar del tiempo restante de la cinta (con el símbolo menos).

NOTA
- La grabación no podrá realizarse si están rotas las lengüetas de prevencion de borradura de ambos lados de la cinta.
- La función AI EDIT no se podrá utilizar con discos que tengan 31 canciones o más.

GRABACION CON EDICION PROGRAMADA

La funcion PROGRAMMED EDIT (edicion programada) permite grabar discos compactos mientras se comprueba el tiempo restante de cada cara de la cinta según se programan las canciones.

NOTA
La grabación con edición programada no empezará desde un punto ubicado en medio de la cinta. La cinta deberá grabarse desde el principio de ambas caras.

Utilice el control remoto desde el paso 3 al 8.

1 **Inserte la cinta en la platina 2 y pulse el botón DOLBY NR para activar o desactivar Dolby NR.**
Inserte la cinta con el lado que vaya a grabar en primer lugar hacia la parte delantera.

2 **Pulse el botón CD e introduzca el(los) disco(s).**

3 **Pulse dos veces el botón EDIT/CHECK.**
"EDIT" se encenderá y "PRGM" parpadeará en el visualizador.

Continúa

ENREGISTREMENT AVEC MONTAGE ET CALCUL DU TEMPS

Pour contrôler l'ordre des numéros des plages programmées
Avant l'enregistrement, appuyer sur la touche EDIT/CHECK pour sélectionner la face A ou B, puis appuyer sur la touche ◀◀ ou ▶▶ à plusieurs reprises → A

AFFICHAGE
① Face de la cassette
② Numéro de programme
③ Numéros des plages programmées
④ Numéro de plage

Pour ajouter des plages d'autres disques au programme du montage
S'il reste du temps sur la cassette après l'étape 5 de la page 41, on peut ajouter des plages des autres disques situes dans le compartiment.
1 Appuyer sur la touche EDIT/CHECK pour sélectionner la face A ou B.
2 Appuyer sur une des touches DISC DIRECT PLAY pour sélectionner un disque.
3 Sélectionner les plages à l'aide des touches numériques.
AI s'eteint et PRGM se met à clignoter sur l'affichage.
Une plage dont la durée de lecture est supéneure au temps restant ne peut pas être programmée.
4 Pour ajouter d'autres plages, répéter les étapes 2 et 3.

Durée des cassettes et temps du montage
La durée d'une cassette est généralement supérieure à celle indiquée sur l'etiquette. Cet appareil peut programmer des plages pour utiliser le temps en exces. Quand la duree totale d'enregistrement est légèrement supérieure à la durée spécifiee pour la cassette après le montage, l'affichage indique le temps en excès (sans le signe moins) au lieu du temps restant (avec le signe moins).

REMARQUE
- Si l'ergot de sécurité d'une face ou l'autre de la cassette est absent, l'enregistrement ne se fait pas.
- La fonction AI EDIT ne peut pas être utilisée avec les disques contenant 31 plages ou plus.

ENREGISTREMENT AVEC MONTAGE PROGRAMME

La tonction PROGRAMMED EDIT (montage programme) permet d'enregistrer a partir de disques compacts tout en contrôlant le temps restant sur chaque face de la cassette au fur et à mesure de la programmation des plages.

REMARQUE
L'enregistrement avec montage programmé ne démarrera pas à un point situé au milieu d'une face. La cassette doit être enregistrée à partir du début d'une de ses faces.

Des étapes 3 à 8, utiliser la télécommande.

1 **Insérer la cassette dans la platine 2 puis appuyer sur la touche DOLBY NR pour mettre le réducteur de bruit Dolby en ou hors service.**
Insérer la cassette avec la face à enregistrer en premier orientée vers l'avant.

2 **Appuyer sur la touche CD et mettre le(s) disque(s) en place.**

3 **Appuyer deux fois sur la touche EDIT/CHECK.**
"EDIT" s'allume et "PRGM" clignote sur l'affichage.

A suivre

Downloaded from www.Manualslib.com manuals search engine

Compaq ProLiant 1200

To remove the Compaq ProLiant 1200 processor:

1. Perform the preparation procedures. See page 2-2.
2. Remove the processor cage (see page 2-21) and open the cage door.
3. Push in the latches on each side of the processor until you hear two clicks ❶. This locks the tabs in the open position.
4. Lift the processor from the processor board ❷.

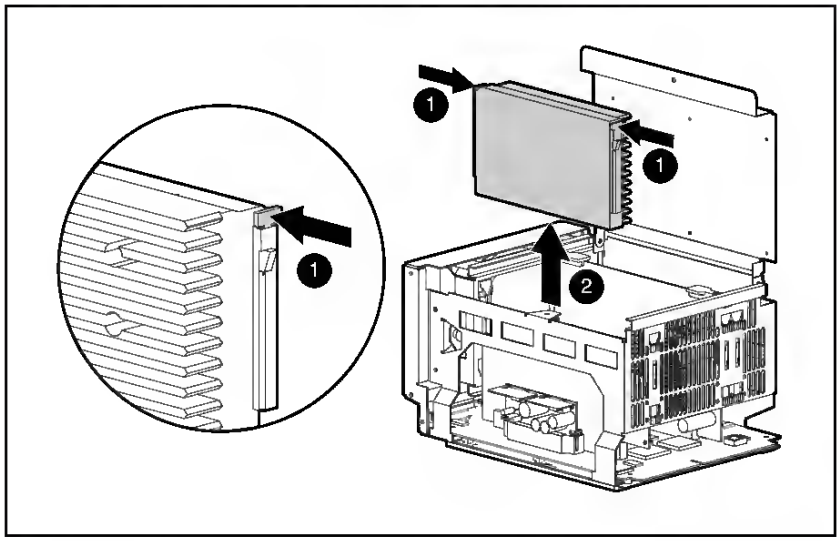

Figure 2-23. Removing the Processor from the Compaq ProLiant 1200 Server

Reverse steps 1 through 4 to replace the Compaq ProLiant 1200 processor.

Downloaded from www.Manualslib.com manuals search engine

8 10 ACER_LCD_G24_SCHEMATICS_INTERFACE 8D _AUDIO LINE OUT

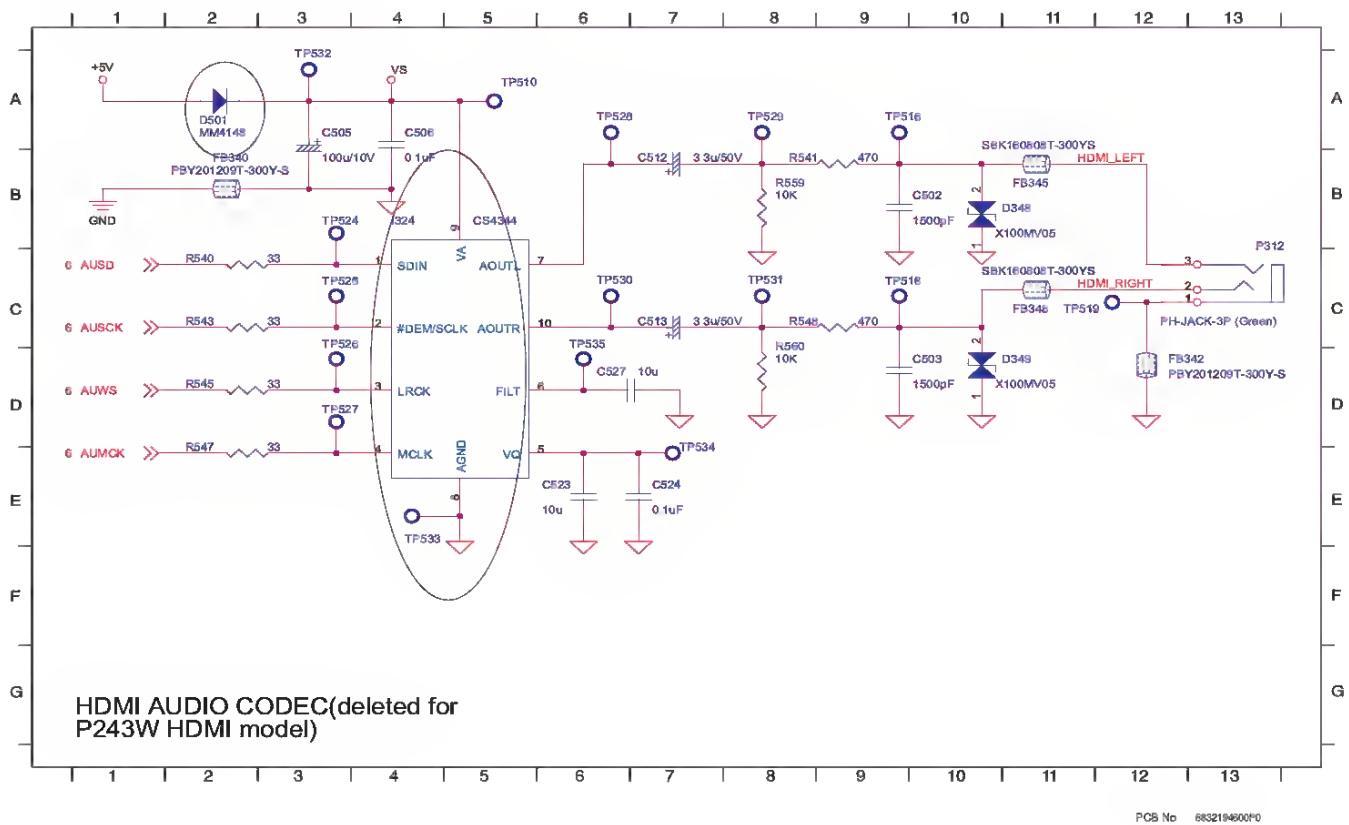

PCB No 6832194600P0

Downloaded from www.Manualslib.com manuals search engine

Diagnostic Tools Overview

These tools were developed to assist in diagnosing problems, testing the hardware, and monitoring and managing Compaq server hardware.

Table 3-1
Diagnostic Tools

Tool	What it is	How to run it
Compaq Diagnostics	Utility to assist testing and verifying operation of Compaq hardware. If problems are found, Compaq Diagnostics isolates the failure down to the replaceable part, whenever possible.	Compaq Diagnostics software is available on the Compaq SmartStart and Support Software CD. Create a Diagnostics diskette from SmartStart and Support Software CD, and run Diagnostics from diskette.
Compaq Insight Manager	A client/server application used to remotely manage Compaq hardware in a network environment. Reports hardware fault conditions (both failure and pre-failure) and collects data for reporting and graphing.	For more information, refer to the Compaq Management CD and the *Compaq Insight Manager User Guide*. More information on viewing and printing the event list can be found in the Compaq Insight Manager section of this chapter.
Compaq Survey Utility	An online information gathering agent that runs on servers, gathering critical hardware and software information from various sources. A utility for servers running Microsoft Windows NT or Novell NetWare. If a significant change occurs between data gathering intervals, previous information is marked, and the survey text file is overwritten to reflect the latest configuration and changes since the last configuration. This allows a historical record of change events for server hardware and software.	Install Survey from SmartStart, the Compaq Integration Maintenance Utility, or the Compaq Management CD.

continued

Downloaded from www.Manualslib.com manuals search engine

ken väljas med hjälp av justenngsvred (ref. D - Figur 1 Sid. 3.)

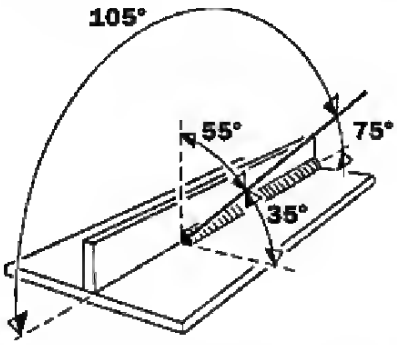

FÖR OPTIMAL SVETSNING HÅLL BRÄNNAREN I SAMMA RIKTNING SOM TRÅDMATNING, SÅ SOM PÅ BILDEN.

6.2 KOLSTÅLSVETSNING

För MIG-svetsning fortsätt enligt följande:

1. 1 Använd en binär skyddande gas (vanligtvis AR/CO2 blandning med blandningsförhållande från 75-80 % Argon och från 20-25 % CO2), eller ternära blandningar så som AR/CO2/O2. Dessa gaser bjuder svetsvärme och homogen och kompakt svetsstreng, fastän inträngningen är svag. Användning av kolsyra (MAG) som skyddande gas uppnår en tunn och väl genomträngd påsvets, men gasens jonisenng kan försämra elbågens stabilitet.
2. Använd trådmatning av samma kvalitet som är kvaliteten av svetsstål. Använd alltid en kvalitetstråd; svetsning med rostiga trådar kan förorsaka svetsdefekter. I allmänheten användbar strömskala för trådanvändning är följande:
   - Ø tråd mm x 100 = minimum ampere
   - Ø tråd mm x 200 = maximum ampere

   Exempel: Ø tråd 1.2 mm= minimum 120 ampere / maximum 240 ampere.
3. Svetsa inte delar med rost, olja eller smörja på.
4. Använd brännare enligt svetsströmspecifikation.
5. Kontrollera regelbundet att underlägg på återledarfästen är inte skadad och att svetskablar (brännare och jord) är inte klippade eller brända, vilket kunde minska etfektiviteten.

6.3 ROSTFRITT STÅL SVETSNING

MIG-svetsning av 300-serie (austenitisk) rostfritt stål måste utföras med en skyddande gas som har en hög argonvolym och ett litet procenttal av O2 för att stabilisera bågen. Den oftast tillämpade blandningen är AR/O2 98/2.

- Använd aldrig CO2 eller AR/CO2 blandningar.
- Berör aldrig tråden.

Tillsatsmaterialet som används måste vara av battre kvalitet än basmaterialet och svetszonen måste vara absolut ren.

6.4 ALUMINIUMSVETSNING

För MIG-svetsning av aluminium använd följande:

1. 100 % Argon som skyddande gas.
2. Fyllnadstråd med sammansättning anpassad till svetsbasmaterialet. För att svetsa ALUMAN och ANTICORODAL använd 3-5 % kiseltråd. För att svetsa PERALUMAN och ERGAL använd 5 % magnesiumtråd.
3. Använd brännare som är bestämmd för aluminiumsvetsning.

6.5 PUNKTSVETSNING

Den har typen av svetsning tillämpas för punktsvetsning av två överlappande plåtar och kräver anvandning av en speciell gasdysa.

Montera in gasdysan för punktsvetsning, tryck den mot stycket som ska svetsas. Tryck på brännarknappen; observera att det kan hända att svetsmaskinen lösgör sig från stycket. Denna tidsperiod är inställd av TIMER regulatorn (ref. A - Figur 1 Sid. 3.) och måste justeras beroende av materialets tjocklek.

7.0 SVETSNINGSFEL VID MIG-SVETSNING

KLASSIFICERING AV FEL OCH DERAS BESKRIVNING

MIG-svetsar kan ha olika defekter och det är viktigt att identifiera dem. Sådana fel skiljer sig inte i form eller karaktär från dessa som förekommer vid manuell bågsvetsning med belagda elektroder. Skillnaden mellan de två metoderna består oftast i defektfrekvensen: porositet, till exempel, är vanligare vid MIG-svetsningen och slaggen förekommer bara vid svetsningen med belagda elektroder.

Orsaker och förebyggande av fel är också ganska annorlunda.

Den följande tabellen visar olika fel.

FEL	UTSEENDE	ORSAK OCH ÅTGÄRDER
OJÄMN NIVÅ		- Dålig beredning - Utjämna kanter och håll under punktsvetsning
ÖVERTJOCKLEK		- Ingen utgångsspänning eller svetshastighet tör låg - Felaktig brännarlutning - Tråddiameter för stor
BRISTANDE METALL		- Svetshastighet för hög - Svetsspänning för låg for svetsmetoden
OXIDERAD PÅSVETS		- Svetsa i U-stången om en lång båge användas - Regulera spänningen - Tråden är böjd eller över-utskjutande ur trådtörarslangen - Felaktig trådmatningshastighet
BRISTFÄLLIG GENOMTRÄNGNING		- Felaktig brännarlutning - Felaktig eller otillräcklig avstånd - trådförarslangen är utsliten - Trådhastighet för låg för tillämpad spänning eller för svetshastighet

Downloaded from www.Manualslib.com manuals search engine

VOCAL FADER/MULTIPLEX FUNCTION

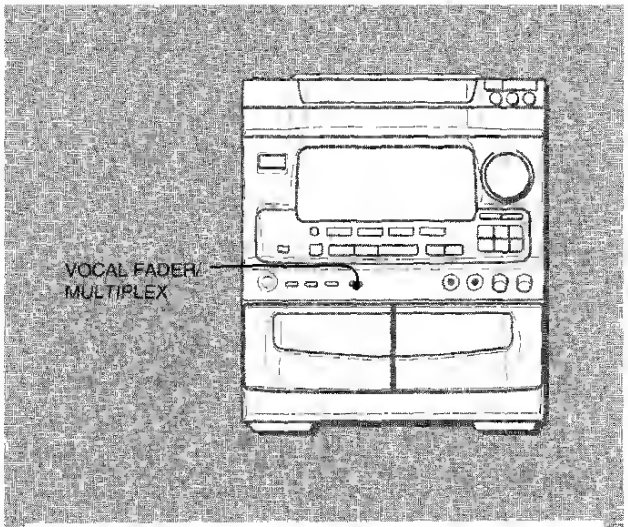

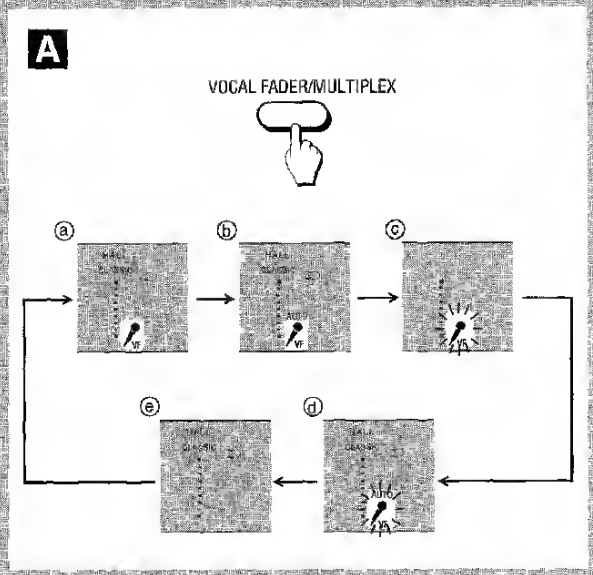

This unit can use discs or tapes as Karaoke sources.

VOCAL FADER/AUTO VOCAL FADER function
The VOCAL FADER function makes the singer's voice on **ordinary discs or tapes** softer than the accompaniment. In the AUTO VOCAL FADER function, the VOCAL FADER operates only while there is audio input through a microphone.

MULTIPLEX/AUTO MULTIPLEX function
The MULTIPLEX function mutes the vocal part on **multi audio discs or tapes,** so that the accompaniment is output through both speakers. In the AUTO MULTIPLEX function, the MULTIPLEX operates only while there is audio input through a microphone.

Press the VOCAL FADER/MULTIPLEX button repeatedly to select the function.
Each time it is pressed, the function can be selected cyclically.
→ A
ⓐ VOCAL FADER
ⓑ AUTO VOCAL FADER
ⓒ MULTIPLEX
ⓓ AUTO MULTIPLEX
ⓔ Cancel

Multi audio discs and tapes
The MULTIPLEX function is designed to work with multi audio discs and tapes which have the vocal part on the right channel and the accompaniment on the left channel.

NOTE

- The VOCAL FADER function may not operate correctly with the following kinds of CDs or tapes.
  - Those with monaural sound
  - Those recorded with strong echoes
  - Those with the vocal part recorded on the right or left side of the sound width
- While the VOCAL FADER function is on, the sound is output as monaural.

Downloaded from www.Manualslib.com manuals search engine

Processor Power Module

To remove a processor power module:

1. Perform the preparation procedures. See "Preparation Procedures" earlier in this chapter.
2. Remove the side access panel. See "Side Access Panel" earlier in this chapter.
3. Remove the top access panel. See "Top Access Panel" earlier in this chapter.
4. Push the two locking clips out to release the processor power module ❶.
5. Remove the processor power module ❷.

NOTE: The processor power module may be a different model than illustrated.

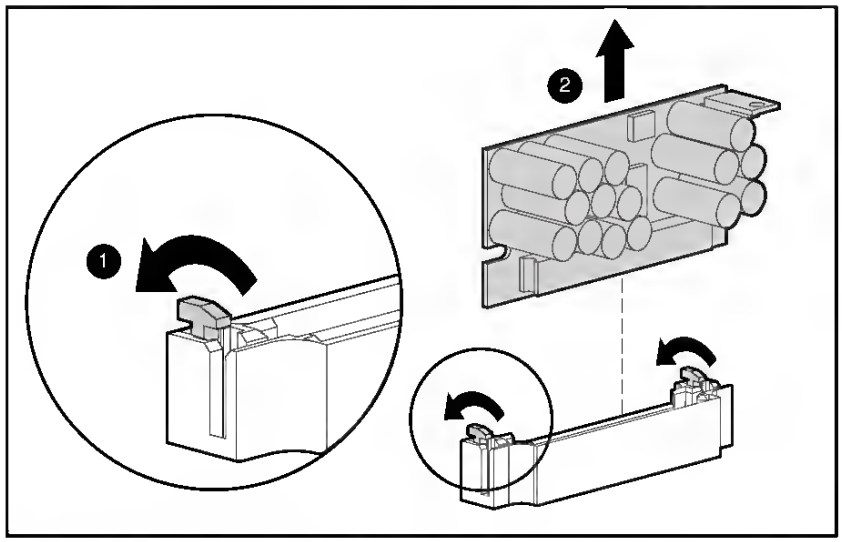

Figure 2-32 Removing the processor power module.

Reverse steps 1 through 5 to replace the processor power module.

NOTE: The locking clips lock into place when the processor power module is properly seated.

Downloaded from www.Manualslib.com manuals search engine

Table 2–5 Minimum Retire Latencies for Instruction Classes (Continued)

Instruction Class	Retire Stage	Comments
Floating-point DIV/SQRT	11 + latency	Add latency of unit reuse for the instruction indicated in Table 2–4. For example, latency for a single-precision fdiv would be 11 plus 9 from Table 2–4. Latency is 11 if hardware detects that no exception is possible (see Section 2.4.1).
Floating-point conditional branch	11	Branch instruction mispredict is reported in stage 7.
BSR/JSR	10	JSR instruction mispredict is reported in stage 8.

2.4.1 Floating-Point Divide/Square Root Early Retire

The floating-point divider and square root unit can detect that, for many combinations of source operand values, no exception can be generated. Instructions with these operands can be retired before the result is generated. When detected, they are retired with the same latency as the FP add class. Early retirement is not possible for the following instruction/operand/architecture state conditions:

- Instruction is not a DIV or SQRT.
- SQRT source operand is negative.
- Divide operand exponent_a is 0.
- Either operand is NaN or INF.
- Divide operand exponent_b is 0.
- Trapping mode is /I (inexact).
- INE status bit is 0.

Early retirement is also not possible for divide instructions if the resulting exponent has any of the following characteristics (EXP is the result exponent):

- DIVT, DIVG: (EXP >= $3FF_{16}$) OR (EXP <= 2_{16})
- DIVS, DIVF: (EXP >= $7F_{16}$) OR (EXP <= 382_{16})

2.5 Retire of Operate Instructions into R31/F31

Many instructions that have R31 or F31 as their destination are retired immediately upon decode (stage 3). These instructions do not produce a result and are removed from the pipeline as well. They do not occupy a slot in the issue queues and do not occupy a functional unit. Table 2–6 lists these instructions and some of their characteristics. The instruction type in Table 2–6 is from Table C-6 in Appendix C of the *Alpha Architecture Handbook, Version 4*.

Downloaded from www.Manualslib.com manuals search engine

Remarque à l'intention des utilisateurs canadiens

Cet appareil numérique de la classe B est conforme a la norme NMB-003 du Canada

Compliant with Russian regulatory certification

Radio device regulatory notice

Note The regulatory information below is for models with wireless LAN and/or Bluetooth only

General

This product complies with the radio frequency and safety standards of any country or region in which it has been approved for wireless use. Depending on configurations, this product may or may not contain wireless radio devices (such as wireless LAN and/or Bluetooth modules)

Canada — Low-power license-exempt radio communication devices (RSS-247)

a Common information
Operation is subject to the following two conditions
1. This device may not cause interference, and
2. This device must accept any interference, including interference that may cause undesired operation of the device.

b Operation in 2.4 GHz band
To prevent radio interference to the licensed service, this device is intended to be operated indoors and installation outdoors is subject to licensing.

List of applicable countries

This device must be used in strict accordance with the regulations and constraints in the country of use. For further information, please contact the local office in the country of use. Please see http://ec.europa.eu/enterprise/rtte/implem.htm for the latest country list.

Battery

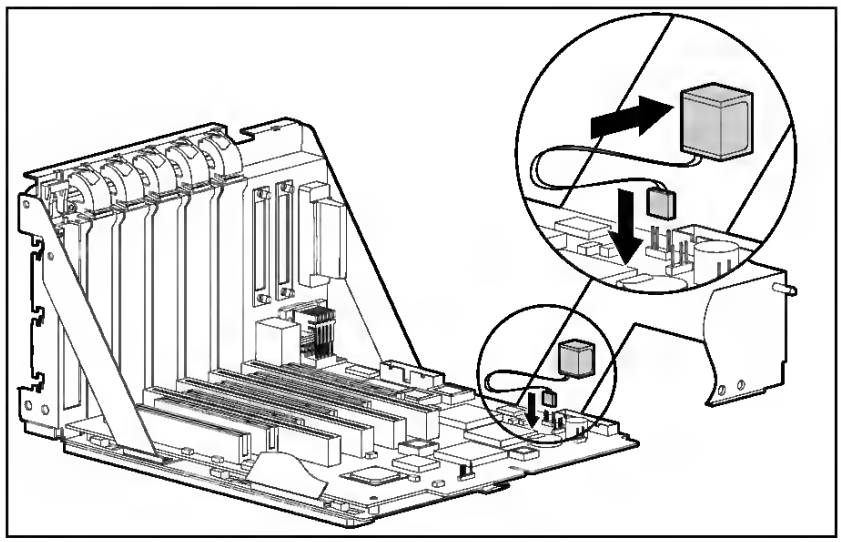

Figure 2-39. Battery Module

1. Remove the small access panel.
2. Remove expansion boards if necessary.
3. Connect the battery cable to the battery header on the system I/O board.
4. Move the jumper on connector E2 from pins 1 and 2 to pins 2 and 3.
5. Attach the battery to the tray assembly using the self-stick adhesive.
6. Run Compaq System Configuration Utility.

CAUTION: Do not remove the lithium battery from the system I/O board. Permanent damage may occur to the system I/O board if removed. If the battery fails, use the battery module replacement.

WARNING: The battery/clock module contains a lithium battery that may explode if mishandled. Do not abuse, recharge, disassemble, or dispose of in fire or heat above 90° C, incinerate, or expose to water or fire. Use only replacement battery/clock modules supplied by Compaq Computer Corporation.

Downloaded from www.Manualslib.com manuals search engine

TSU56AK

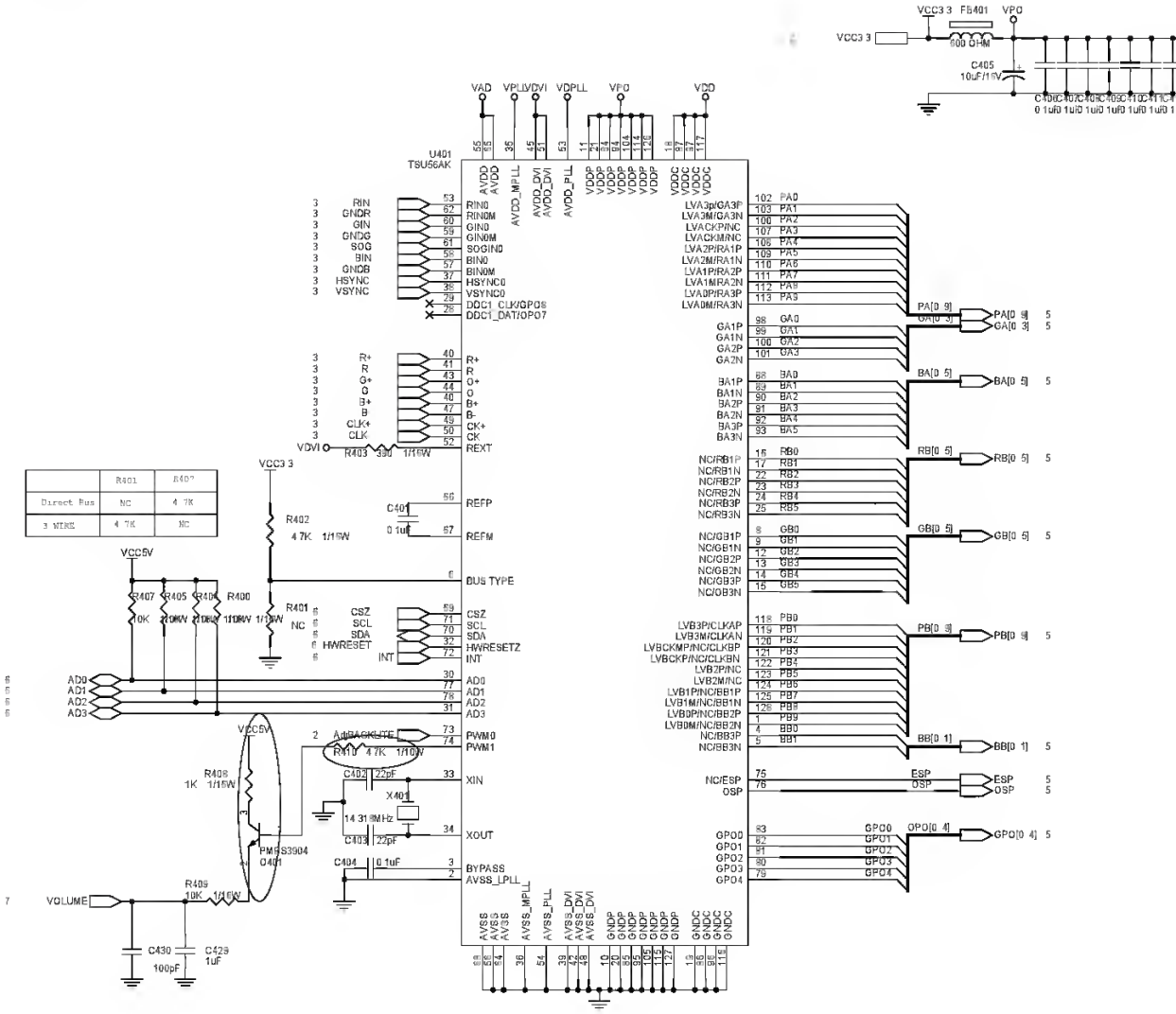
VCC3 3
FB401
VPO
600 OHM
C405
10uF/16V
U401
TSU56AK
VAD
VPLL/DVI
VDPLL
VPO
VDD
RIN
GNDR
GIN
GNDG
SOG
BIN
GNDB
HSYNC
VSYNC
DDC1_CLK/GPO8
DDC1_DAT/OPO7
R+
R-
G+
G-
B+
B-
CK+
CK-
REXT
VDVI
R403 330 1/16W
R402
4.7K 1/16W
C401
0.1uF
REFP
REFM
BUS TYPE
R401
NC
CSZ
SCL
SDA
HWRESETZ
INT
R407 10K
R405 10K
R406 10K
R400 10K
VCC5V
AD0
AD1
AD2
AD3
PWM0
PWM1
R410 4.7K 1/16W
C402 22pF
X401
14.31818MHz
C403 22pF
XIN
XOUT
BYPASS
AVSS_LPLL
R408
1K 1/16W
PMBS3904
C401
C404 0.1uF
R409
10K 1/16W
VOLUME
C430
100pF
C429
1uF
LVA3P/GA3P
LVA3M/GA3N
LVACKP/NC
LVACKM/NC
LVA2P/RA1P
LVA2M/RA1N
LVA1P/RA2P
LVA1M/RA2N
LVA0P/RA3P
LVA0M/RA3N
PA[0 9]
PA[0 3]
GA[0 3]
BA[0 5]
RB[0 5]
GB[0 5]
LVB3P/CLKAP
LVB3M/CLKAN
LVBCKMP/NC/CLKBP
LVBCKP/NC/CLKBN
LVB2P/NC
LVB2M/NC
LVB1P/NC/BB1P
LVB1M/NC/BB1N
LVB0P/NC/BB2P
LVB0M/NC/BB2N
PB[0 9]
BB[0 1]
ESP
OSP
GPO0
GPO1
GPO2
GPO3
GPO4
GPO[0 4]

Troubleshooting

This chapter shows you how to deal with common system problems. Read it before calling a technician if a problem occurs. Solutions to more serious problems require opening up the computer. Do not attempt to open the computer yourself; contact your dealer or authorized service center for assistance.

Troubleshooting tips

This computer incorporates an advanced design that delivers onscreen error message reports to help you solve problems.

If the system reports an error message or an error symptom occurs, see "Error messages" below. If the problem cannot be resolved, contact your dealer.

Error messages

If you receive an error message, note the message and take the corrective action. The following table lists the error messages in alphabetical order together with the recommended course of action.

Error messages	Corrective action
CMOS battery bad	Contact your dealer or an authorized service center.
CMOS checksum error	Contact your dealer or an authorized service center.
Disk boot failure	Insert a system (bootable) disk, then press <**Enter**> to reboot.
Equipment configuration error	Press <**F2**> (during POST) to enter the BIOS utility, then press **Exit** in the BIOS utility to reboot.
Hard disk 0 error	Contact your dealer or an authorized service center.
Hard disk 0 extended type error	Contact your dealer or an authorized service center.
I/O parity error	Contact your dealer or an authorized service center.

Downloaded from www.Manualslib.com manuals search engine

Active/Active Configuration with Four RA4000/RA4100 Arrays

Figure 2-13 shows an active/active I/O path configuration for a redundant Fibre Channel Fabric in a four-node cluster with four RA4000/RA4100 Arrays.

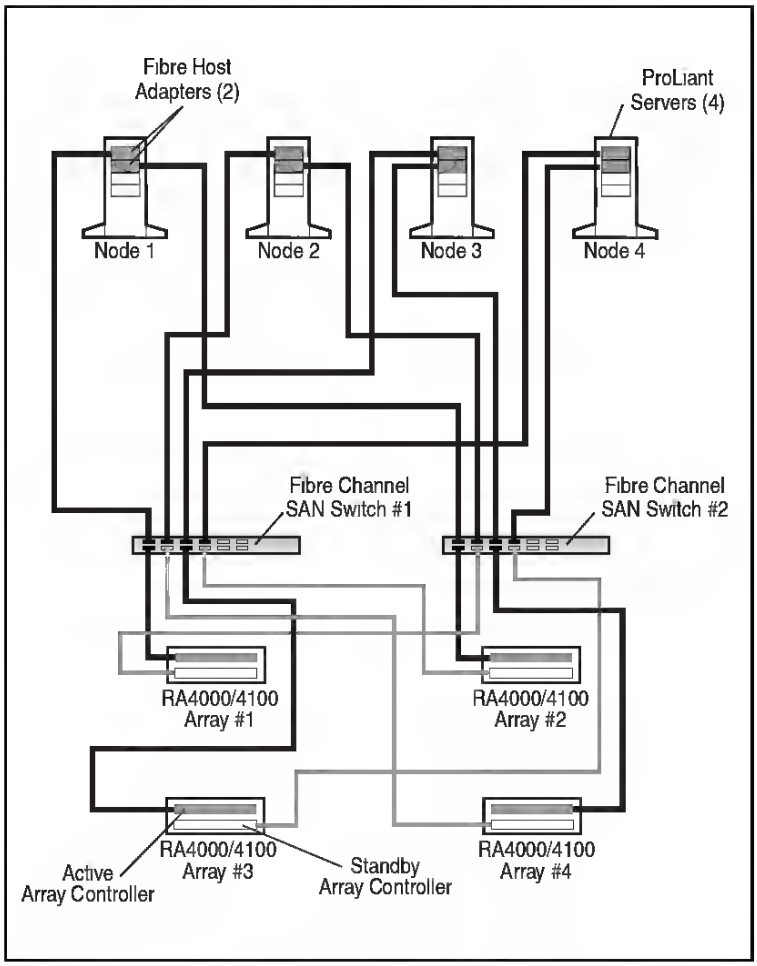

Figure 2-13. Active/active configuration with four RA4000/RA4100 Arrays

Downloaded from www.Manualslib.com manuals search engine

ENREGISTREMENT AVEC MONTAGE ET CALCUL DU TEMPS

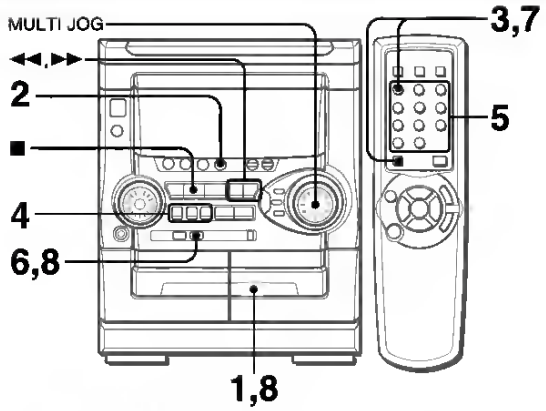

La fonction enregistrement avec montage et calcul du temps permet d'enregistrer à partir de disques compacts sans se préoccuper de la durée de la cassette et des durées des plages. Quand on met un disque compact en place, l'appareil calcule automatiquement la durée totale des plages. Si nécessaire, l'ordre des plages est changé de manière qu'aucune plage ne soit tronquée.
(AI: Intelligence Artificielle)

REMARQUE

L'enregistrement avec montage et calcul du temps ne démarrera pas à un point situé au milieu d'une face. La cassette doit être enregistrée à partir du début d'une de ses faces.

***1* Insérer la cassette dans la platine 2.**
Insérer la cassette avec la face à enregistrer en premier orientée vers l'extérieur de l'appareil.

***2* Appuyer sur CD et mettre le(s) disque(s) en place.**

***3* Appuyer une fois sur CD EDIT/CHECK tout en appuyant sur SHIFT de la télécommande.**
"EDIT" et "AI" sont affichés

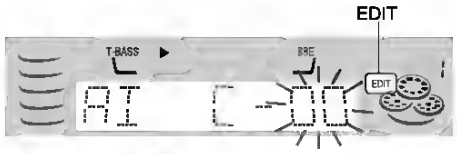

- Si "PRGM" est affiché, appuyer de nouveau sur **CD EDIT/CHECK** tout en appuyant sur **SHIFT**.

***4* Appuyer sur une des touches DISC DIRECT PLAY 1-3 pour sélectionner un disque.**

***5* A l'aide des touches numériques 0-9 de la télécommande, spécifier la durée de la cassette.**
On peut spécifier une durée de 10 à 99 minutes.
Exemple. Quand on utilise une cassette de 60 minutes, appuyer sur 6 et **0**.
En quelques secondes, les plages à enregistrer sur chaque face de la cassette sont déterminées.
- On peut aussi utiliser ◄◄, ►► ou **MULTI JOG** pour spécifier la durée de la cassette.

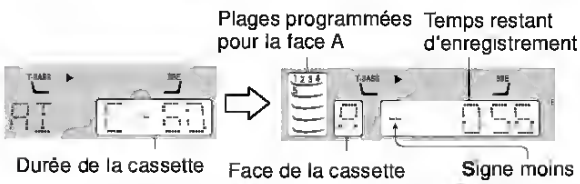

***6* Appuyer sur ● REC/REC MUTE pour démarrer l'enregistrement sur la première face.**
La cassette est rebobinée jusqu'au début de la première face, l'amorce est lue pendant dix secondes, puis l'enregistrement démarre. Une fois que l'enregistrement de la dernière plage programmée pour la face A est terminé, la platine 2 se met en mode arrêt d'enregistrement. Passer alors à l'étape 7.

***7* Appuyer sur CD EDIT/CHECK tout en appuyant sur SHIFT de la télécommande pour afficher le programme du deuxième enregistrement.**
"B" est affiché

***8* Retourner la cassette de la platine 2 puis appuyer sur ● REC/REC MUTE pour démarrer l'enregistrement sur la deuxième face.**

Pour arrêter l'enregistrement
Appuyer sur ■. L'enregistrement de la cassette et la lecture du disque compact s'arrêtent simultanément.

Pour effacer le programme du montage
Appuyer deux fois sur ■ **CLEAR** de manière que "EDIT" disparaisse de l'affichage.

Pour contrôler l'ordre des numéros des plages programmées
Avant l'enregistrement, appuyer sur **CD EDIT/CHECK** tout en appuyant sur **SHIFT** de la télécommande pour sélectionner la face A ou B, puis appuyer sur ◄◄ ou ►► à plusieurs reprises.

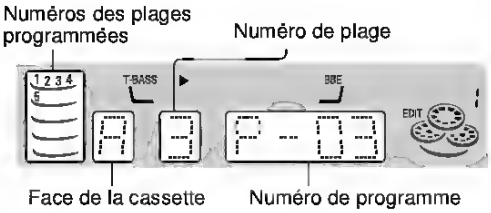

Pour ajouter des plages d'autres disques au programme du montage
S'il reste du temps sur la cassette après l'étape 5, on peut ajouter des plages des autres disques situés dans le compartiment.
1 Appuyer sur **CD EDIT/CHECK** tout en appuyant sur **SHIFT** de la télécommande pour sélectionner la face A ou B.
2 Appuyer sur une des touches **DISC DIRECT PLAY 1-3** pour sélectionner un disque.
3 Sélectionner les plages à l'aide des touches numériques de la télécommande.
Une plage dont la durée de lecture est supérieure au temps restant ne peut pas être programmée.
4 Pour ajouter d'autres plages, répéter les étapes 2 et 3.

Durée des cassettes et temps du montage
La durée d'une cassette est généralement supérieure à celle indiquée sur l'étiquette. Cet appareil peut programmer des plages pour utiliser le temps en excès. Quand la durée totale d'enregistrement est légèrement supérieure à la durée spécifiée pour la cassette après le montage, l'affichage indique le temps en excès (sans signe moins) au lieu du temps restant (avec le signe moins).

REMARQUE

La fonction enregistrement avec montage et calcul du temps ne peut pas être utilisée avec les disques contenant 31 plages ou plus. "TR QVER" est affiché si un tel disque est utilisé.

F

Downloaded from www.Manualslib.com manuals search engine

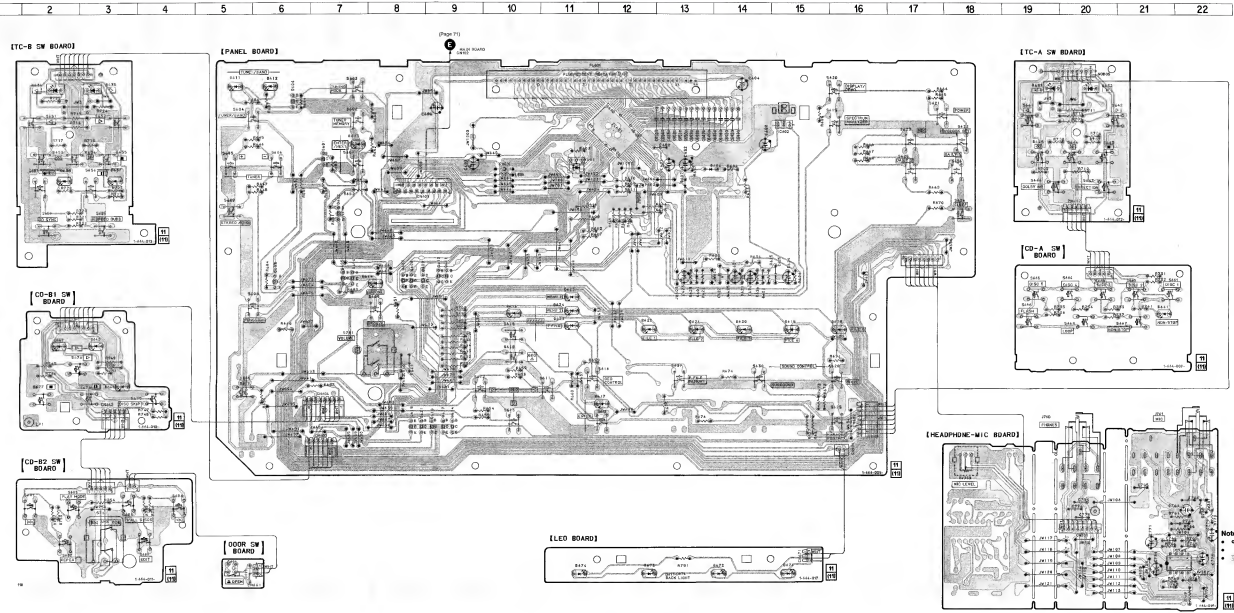

• Semiconductor Location

Ref. No.	Location
D601	E-13
D602	E-14
D606	E-13
D607	D-13
D611	B-5
D612	B-6
D613	C-7
D614	E-8
D616	F-10
D617	G-12
D618	F-16
D619	F-15
D620	F-14
D621	F-13
D622	F-12
D623	F-11
D624	F-11
D625	E-11
D631	B-19
D632	B-20
D635	B-3
D636	B-2
D637	C-3
D638	C-2
D641	F-21
D645	F-3
D646	G-3
D647	F-2
D671	J-15
D672	J-14
D673	J-12
D674	J-11
IC601	C-12
IC602	B-15
IC750	J-22
Q601	C-7
Q602	D-7
Q603	E-6
Q604	B-6
Q605	E-7
Q606	E-7
Q607	E-8
Q608	E-8
Q609	E-8
Q610	E-9
Q611	E-9
Q614	H-9
Q617	H-9
Q618	H-9
Q619	H-8
Q621	H-8

Note:
• : parts extracted from the component side.
• ⚠ : Internal component.
• : Pattern from the side which enables seeing.

TROUBLESHOOTING

Help is available from your A600 in the event of problems. Events and information are displayed on the monitor screen. If you are still unable to resolve the problem despite your best efforts, please contact our Service department.

Elimination of machine errors

Non-self-service mode

An error is displayed using a symbol highlighted with a color in non-self-service mode

A message with instructions

Contact your service technician if the machine cannot be started or if you are unable to rectify the error.

The machine must be restarted in the event of serious errors. Check the power supply if the machine fails to start.

If the entire system is affected by an error, error messages will appear automatically.

Self-service mode

An error is displayed using a colored corner in self-service mode

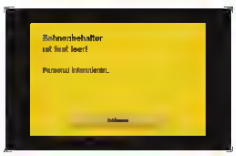

A message with instructions for your customer

Color code for error messages

Temporary interruption

System has limited functionality

System still fully functional

Some or all resources are locked

Downloaded from www.Manualslib.com manuals search engine

2.4 Disk Drives

Select Disk Drives to input configuration values for disk drives.

The following screen shows the Disk Drives menu:

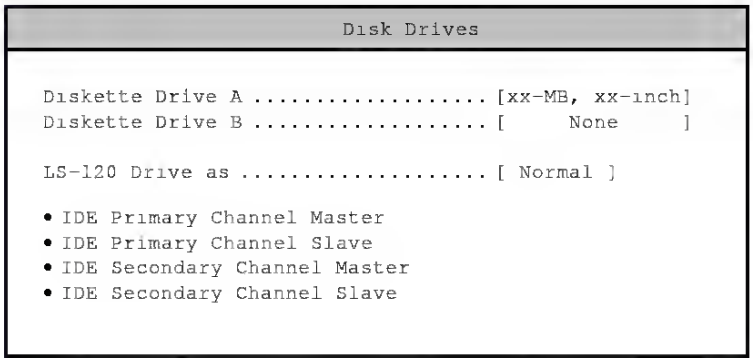

2.4.1 Floppy Drives

To enter the configuration value for the first floppy drive (drive A), highlight the Floppy Drive A parameter. Press → or ← key to view the options and select the appropriate value.

Possible settings for the Floppy Drive parameters are:

- [None]
- [360 KB, 5.25-inch]
- [1.2 MB, 5.25-inch]
- [720 KB, 3.5-inch]
- [1.44 MB, 3.5-inch]
- [2.88 MB, 3.5-inch]

Follow the same procedure to configure floppy drive B. Choose None if you do not have a second floppy drive.

Downloaded from www.Manualslib.com manuals search engine

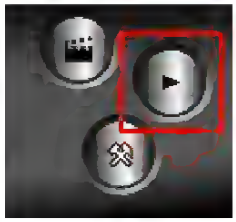

Play: Click on the **Play** button to playback the recorded videos from your hard drive.

A window will appear asking you for the location of the recorded video. Select the desired video and click **OK** to begin playback.

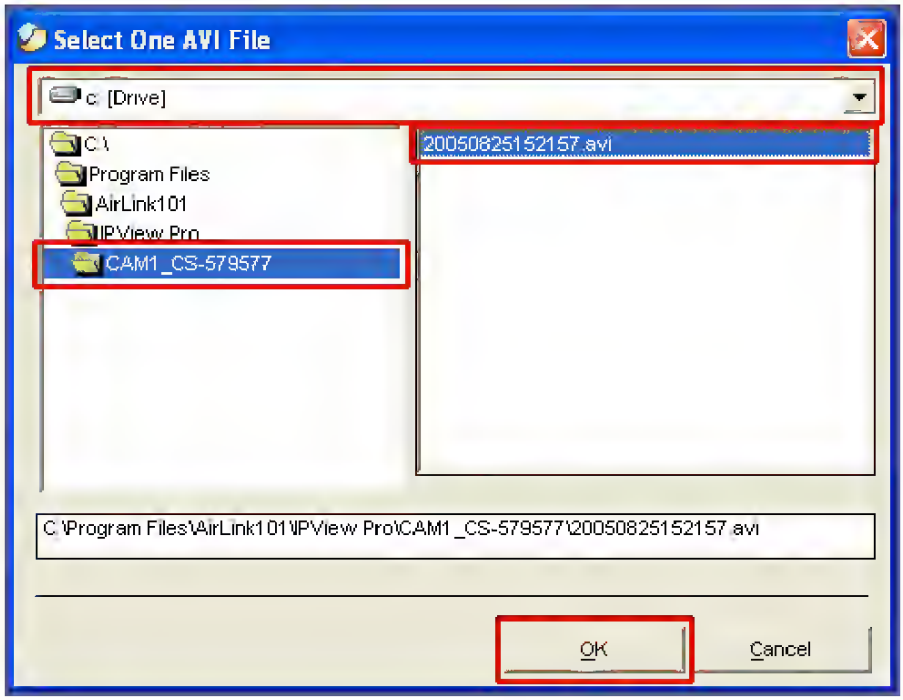

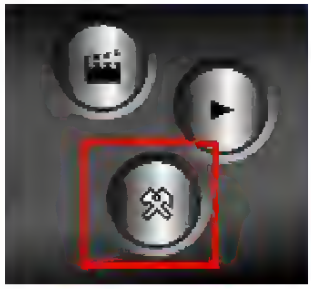

System Configuration: Click on the **System Configuration Button** to open the **System Configuration Window**.

Downloaded from www.Manualslib.com manuals search engine

Message	Description
3rd Slave Drive - ATAPI Incompatible	The IDE/ATAPI device configured as Slave in the 3rd IDE controller failed an ATAPI compatibility test. This message is typically displayed when the BIOS is trying to detect and configure IDE/ATAPI devices in POST.
4th Master Drive - ATAPI Incompatible	The IDE/ATAPI device configured as Master in the 4th IDE controller failed an ATAPI compatibility test. This message is typically displayed when the BIOS is trying to detect and configure IDE/ATAPI devices in POST.
4th Slave Drive - ATAPI Incompatible	The IDE/ATAPI device configured as Slave in the 4th IDE controller failed an ATAPI compatibility test. This message is typically displayed when the BIOS is trying to detect and configure IDE/ATAPI devices in POST.
5th Master Drive - ATAPI Incompatible	The IDE/ATAPI device configured as Master in the 5th IDE controller failed an ATAPI compatibility test. This message is typically displayed when the BIOS is trying to detect and configure IDE/ATAPI devices in POST.
5th Slave Drive - ATAPI Incompatible	The IDE/ATAPI device configured as Slave in the 5th IDE controller failed an ATAPI compatibility test. This message is typically displayed when the BIOS is trying to detect and configure IDE/ATAPI devices in POST.
6th Master Drive - ATAPI Incompatible	The IDE/ATAPI device configured as Master in the 6th IDE controller failed an ATAPI compatibility test. This message is typically displayed when the BIOS is trying to detect and configure IDE/ATAPI devices in POST.
6th Slave Drive - ATAPI Incompatible	The IDE/ATAPI device configured as Slave in the 6th IDE controller failed an ATAPI compatibility test. This message is typically displayed when the BIOS is trying to detect and configure IDE/ATAPI devices in POST.
S.M.A.R.T. Capable but Command Failed	The BIOS tried to send a S.M.A.R.T. message to a hard disk, but the command transaction failed. This message can be reported by an ATAPI device using the S.M.A.R.T. error reporting standard. S.M.A.R.T. failure messages may indicate the need to replace the hard disk.
S.M.A.R.T. Command Failed	The BIOS tried to send a S.M.A.R.T. message to a hard disk, but the command transaction failed. This message can be reported by an ATAPI device using the S.M.A.R.T. error reporting standard. S.M.A.R.T. failure messages may indicate the need to replace the hard disk.
S.M.A.R.T. Status BAD, Backup and Replace	A S.M.A.R.T. capable hard disk sends this message when it detects an imminent failure. This message can be reported by an ATAPI device using the S.M.A.R.T. error reporting standard. S.M.A.R.T. failure messages may indicate the need to replace the hard disk.
S.M.A.R.T. Capable and Status BAD	A S.M.A.R.T. capable hard disk sends this message when it detects an imminent failure. This message can be reported by an ATAPI device using the S.M.A.R.T. error reporting standard. S.M.A.R.T. failure messages may indicate the need to replace the hard disk.

Downloaded from www.Manualslib.com manuals search engine

Removing a child restraint system/ deactivating the special seat belt retractor:

- ▶ Always comply with the manufacturer's installation instructions.
- ▶ Press the seat belt release button and guide the belt tongue to the belt outlet. The special seat belt retractor is deactivated.

⚠ WARNING

Never release the seat belt buckle while the vehicle is in motion, since the special seat belt retractor will be deactivated.

LATCH-type (ISOFIX) child seat anchors in the rear

⚠ WARNING

Children that are too large for a child restraint must travel in seats using normal seat belts. Position shoulder belt across the chest and shoulder, not face or neck.

A booster seat may be necessary to achieve proper seat belt positioning for children over 41 lb (18 kg) until they reach a height where a lap/shoulder belt fits properly without a booster.

Install the child restraint system in accordance with the manufacturer's instructions.

Attach the child restraint system to both securing rings.

An incorrectly installed child restraint system could come loose during an accident and seriously or even fatally injure the child.

Child restraint systems or child seat securing rings that are malfunctioning or damaged as the result of a collision must be replaced.

LATCH-type (ISOFIX) is a standardized securing system for specially designed child restraint systems on the rear seats. Securing rings for two LATCH-type (ISOFIX) child restraint systems are installed on the left and right of the rear seats.

Secure non-LATCH-type (ISOFIX) child restraint systems using the vehicle's seat belt system. When installing child restraint systems, you must observe the manufacturer's installation instructions.

The securing rings on the rear seats are covered by an upholstered lining.

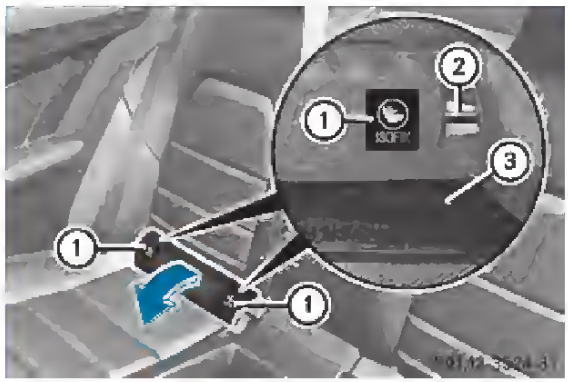

Installation instructions ① indicate the installation location of securing rings ②.

- ▶ Fold upholstery cover ③ and the Velcro fastener down.
- ▶ Install the LATCH-type (ISOFIX) child restraint systems on both securing rings ②. Comply with the manufacturer's instructions when installing the LATCH-type (ISOFIX) child restraint system.

Top Tether

⚠ WARNING

Always lock the rear seat backrests in their upright position when the rear seats are occupied by passengers. Lock the rear seat backrests in their upright position before installing the Top Tether straps or when the cargo compartment is not in use. Make sure that rear seat backrests are secured properly by pushing and pulling on the seat backrests. If the seat backrest is not locked properly, the seat backrest could fold forward. The child restraint system is no longer supported properly or held in position and can no longer fulfill its function. This could cause serious or even fatal injuries.

Downloaded from www.Manualslib.com manuals search engine

Connection through Modems

To connect an asynchronous terminal or PC to the LCS60 for use as a system console by means of modems, refer to Figure 2-5 and follow the steps below:

1. Option Serial Port 1 to emulate DTE operation. (Refer to the section *Serial Port Optioning* earlier in this chapter.)
2. Connect the LCS60 rear panel connector labeled "Serial Port 1" to an asynchronous terminal by means of modems using straight-through RS-232 cabling. Modems must operate asynchronously at 9600 bps.
3. Power up the system console and set options as directed in Table 2-4.
4. Continue with the *Connecting Fiber Interface* section.

Figure 2-5: System Console Connections – through Modems

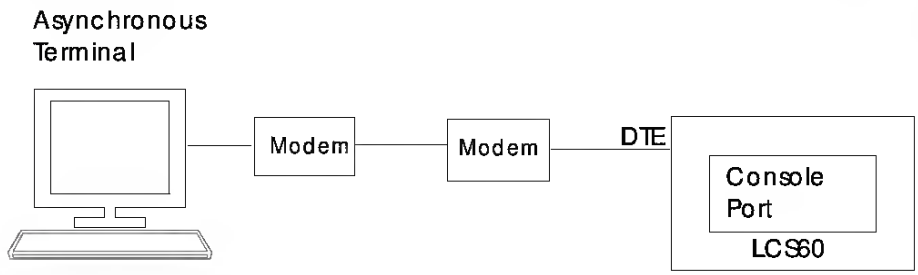

Connection through StarKeeper II NMS

For the StarKeeper II NMS connection (Figure 2-6), follow the steps below:

1. Serial Port 1 should be optioned to emulate DCE operation. This is the default; therefore, if you haven't changed anything there will be no need to change the option.

Downloaded from www.Manualslib.com manuals search engine

Než zavoláte technika

Špatný příjem	Zdvojený nebo vícenásobný obraz či stíny mohou být zapříčiněny blízkostí hor nebo vysokých budov. V tom případě se pokuste doladit obraz ručně viz **Doladění** (str. 6) nebo změňte nastavení venkovní antény. Ověřte si, že vaše anténa umožňuje přijímat vysílání v tomto kmitočtovém pásmu (v pásmu UHF nebo VHF). V případě špatného příjmu **Sněžení** nastavte volbu **NR** v menu **Zvl. Obraz** na **Zap** (str. 7).
Chybí obraz	Zapojili jste správně anténu? Zvolili jste správný systém? (str. 6). Špatně připojené eurokonektory či kabel antény jsou častou příčinou problémů s obrazem a zvukem. (může se stát, že se konektory částečně odpojí, když televizor přemisťujeme či otáčíme). Zkontrolujte všechna připojení.
Televizor ukazuje černobílý obraz z připojených přístrojů	U videorekordéru zkontrolujte, zda kazeta byla nahrána ve takovém systému (PAL, SECAM, NTSC), aby ji váš videorekordér uměl přehrát.
Chybí zvuk	Pokud u některých programů chybí zvuk, ale ne obraz, tak to znamená, že televizor je přepnut na špatný systém. Upravte nastavení TV **Systém** (str. 6).
Teletext	Některé znaky nejsou správně zobrazeny? Ověřte správnost nastavení **Země** (str. S)
Dálkové ovládání nefunguje?	Kontrolka na televizoru nebliká, když používáte dálkového ovládání? Vyměňte baterie.
Pohotovostní režim	Když televizor zapnete, je v pohotovostním režimu a po stisknutí tlačítka na televizoru se objeví hlášení **Dětská Pojistka**? To znamená že funkce zablokování je zapnutá (str. 8). Pokud televizor během 10 min nepřijímá žádný signál, přepne se automaticky do pohotovostního režimu. V režimu Stand By televizor spotřebovává méně než SW podle modelu.V zájmu životního prostředí, doporučujeme vám používat síťový vypínač pro úplné vypnutí televizoru.
Stále bez výsledků?	V případě poruchy se nikdy nesnažte opravit televizor sami, obraťte se na servis.
Čistění televizoru	Obrazovku a stěny televizoru můžete čistit pouze čistým, jemný a neplstnatým hadříkem. Nepoužívejte čistící prostředky obsahující alkohol či ředidla.

Downloaded from www.Manualslib.com manuals search engine

Tekst 12536 931 5 7 (CZ) 160106 12 12 1/16/2006 2:10:24 PM

12 Month Warranty

Blackmagic Design warrants that this product will be free from defects in materials and workmanship for a period of 1 year from the date of purchase. If a product proves to be defective during this warranty period, Blackmagic Design, at its option, either will repair the defective product without charge for parts and labor, or will provide a replacement in exchange for the defective product.

In order to obtain service under this warranty, you the Customer, must notify Blackmagic Design of the defect before the expiration of the warranty period and make suitable arrangements for the performance of service. The Customer shall be responsible for packaging and shipping the defective product to a designated service center nominated by Blackmagic Design, with shipping charges pre paid. Customer shall be responsible for paying all shipping charges, insurance, duties, taxes, and any other charges for products returned to us for any reason.

This warranty shall not apply to any defect, failure or damage caused by improper use or improper or inadequate maintenance and care. Blackmagic Design shall not be obligated to furnish service under this warranty. a) to repair damage resulting from attempts by personal other than Blackmagic Design representatives to install, repair or service the product, b) to repair damage resulting from improper use or connection to incompatible equipment, c) to repair any damage or malfunction caused by the use of non Blackmagic Design parts or supplies, or d) to service a product that has been modified or integrated with other products when the effect of such a modification or integration increases the time or difficulty of servicing the product. THIS WARRANTY IS GIVEN BY BLACKMAGIC DESIGN IN LIEU OF ANY OTHER WARRANTIES, EXPRESS OR IMPLIED. BLACKMAGIC DESIGN AND ITS VENDORS DISCLAIM ANY IMPLIED WARRANTIES OF MERCHANTABILITY OR FITNESS FOR A PARTICULAR PURPOSE. BLACKMAGIC DESIGN'S RESPONSIBILITY TO REPAIR OR REPLACE DEFECTIVE PRODUCTS IS THE WHOLE AND EXCLUSIVE REMEDY PROVIDED TO THE CUSTOMER FOR ANY INDIRECT, SPECIAL, INCIDENTAL OR CONSEQUENTIAL DAMAGES IRRESPECTIVE OF WHETHER BLACKMAGIC DESIGN OR THE VENDOR HAS ADVANCE NOTICE OF THE POSSIBILITY OF SUCH DAMAGES. BLACKMAGIC DESIGN IS NOT LIABLE FOR ANY ILLEGAL USE OF EQUIPMENT BY CUSTOMER. BLACKMAGIC IS NOT LIABLE FOR ANY DAMAGES RESULTING FROM USE OF THIS PRODUCT. USER OPERATES THIS PRODUCT AT OWN RISK.

© Copyright 2011 Blackmagic Design. All rights reserved. 'Blackmagic Design', 'DeckLink', 'HDLink', 'Workgroup Videohub', 'Multibridge Pro', 'Multibridge Extreme', 'Intensity' and 'Leading the creative video revolution' are registered trademarks in the US and other countries. All other company and product names may be trade marks of their respective companies with which they are associated.

Downloaded from www.Manualslib.com manuals search engine

- Aumente a distância entre o adaptador sem fio e o equipamento que apresenta interferência.
- Conecte o computador com o adaptador sem fio em uma tomada em um circuito diferente daquele em que o equipamento está apresentando a interferência.
- Consultar o revendedor ou um técnico experiente de rádio/TV para obter ajuda.

Informações de exposição a RF da FCC (SAR)

Esse dispositivo atende os requisitos do governo de exposição a ondas de rádio. Esse dispositivo foi projetado e fabricado para não ultrapassar os limites de emissão de exposição à energia de frequência de rádio (RF) definidas pela Comissão Federal de Comunicações do Governo dos EUA.

A norma de exposição para dispositivos sem fio emprega uma unidade de medida conhecida como Taxa de Absorção Específica ou SAR. O limite de SAR definido pela FCC é de 1,6 W/kg. *Os testes de SAR são realizados usando-se posições de operação padrão aceitas pela FCC com o dispositivo transmitindo em seu nível de energia mais alto certificado em todas as bandas de frequência testadas.

Apesar de a SAR ser determinada no mais alto nível de potência certificado, o nível SAR atual do dispositivo durante a operação pode estar bem abaixo do valor máximo. Isso ocorre porque o dispositivo foi projetado para funcionar em vários níveis de potência, usando assim apenas a potência necessária para alcançar a rede.

Em geral, quanto mais próximo você está da antena da estação base sem fio, menor é a saída de potência. Embora possa haver diferenças entre os níveis de SAR de vários dispositivos em várias posições, todos eles atendem os requisitos do governo.

Downloaded from www.Manualslib.com manuals search engine

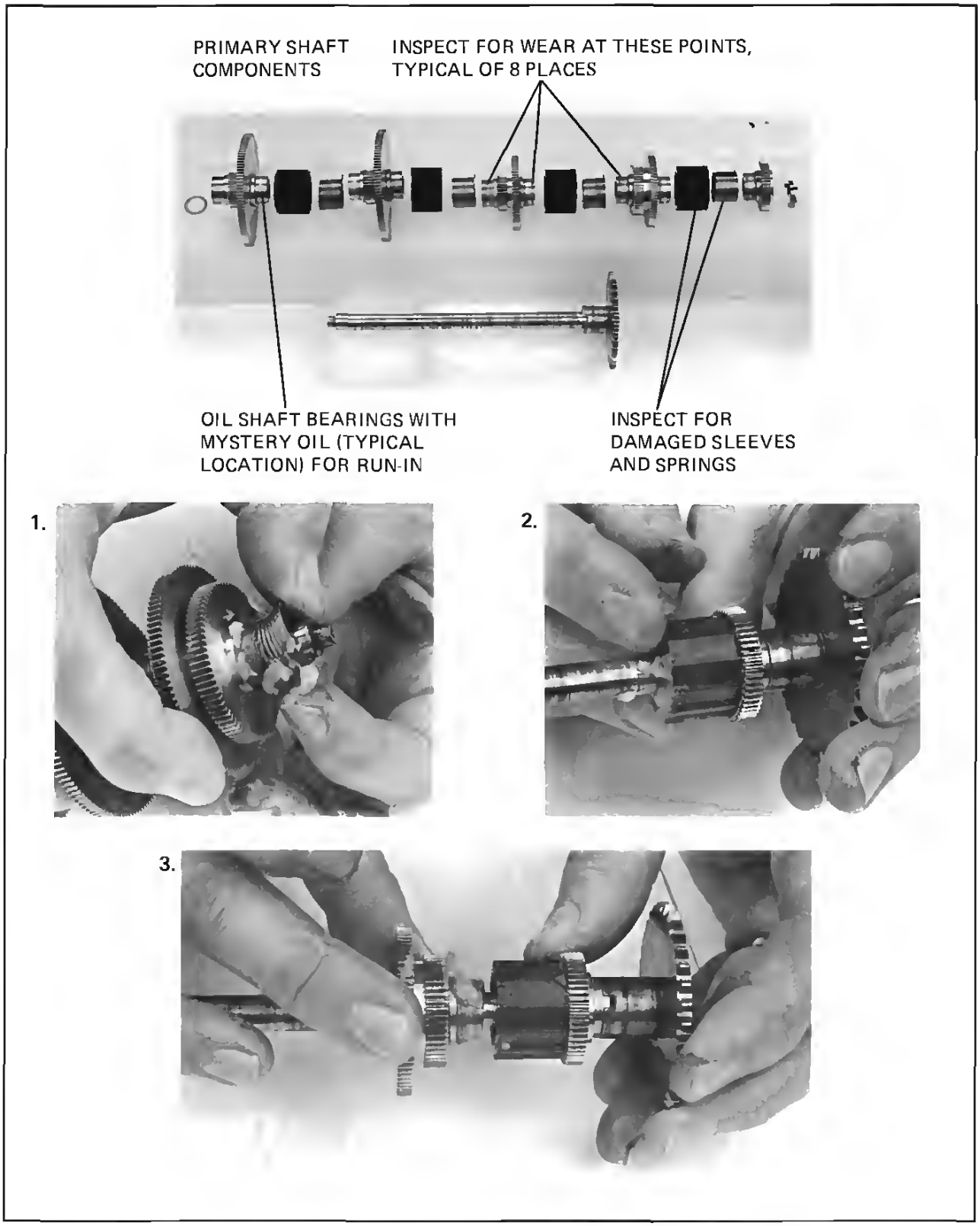

Figure 5-21. Spring Clutch Lubrication (Primary Shaft)

Downloaded from www.Manualslib.com manuals search engine

Battery Care

Using the Battery

When AC wall outlets are not available or convenient, the battery becomes the "lifeline" of your Notebook. In this section you will become familiar with the following:

- Using the Battery
- Storing the Battery
- Recycling the Battery

WARNING: If your Notebook contains a lithium battery pack, improper handling of the battery pack may result in fire and chemical burns. Do not disassemble, crush, puncture, short external contacts, dispose of in water or fire, or expose it to temperatures higher than 140° F (60° C). Replace only with the Compaq battery pack specified for your Notebook.

See also *"Using Battery Power" in Chapter 3 of this guide for inserting, removing, and charging your battery.*

Tip *For safety reasons, when operating under AC power, Compaq recommends that you keep a battery installed. This ensures that you have a charged battery when you need it.*

Downloaded from www.Manualslib.com manuals search engine

Schedule

View the events scheduled on the smartphone.

1. From the Apps screen, rotate the bezel to **10 Schedule**.
2. Rotate the bezel to view other months.
3. Tap a day on the monthly calendar.
   - The day's events list is displayed.
   - Tap an event to view its details
4. Rotate the bezel to view other scheduled events.

Downloaded from www.Manualslib.com manuals search engine

Node-to-Node Communication Problems

This section addresses problems relating to node-to-node communication.

Table 5-3
Solving Node-to-Node Communication Problems

Problem	Possible Cause	Action
New node does not join the cluster	Ethernet crossover cable is not correctly cabled or is defective	Verify that the Ethernet crossover cable is connected as described in Chapter 2 of this guide.
	Embedded NIC is not correctly functioning	Verify that the embedded NIC is correctly configured.
	UnixWare 7 licenses are not correct for the node	Verify that you have the proper UnixWare 7 licenses on the node, including the base UnixWare 7 license and licenses for number of processors, users, features, and so on.
	ServerNet PCI adapter (SPA) is not correctly functioning	Verify the SPA using the ServerNet I Verification Utility (SVU) as described in Chapter 3 of this guide.
	SPA is not correctly cabled or a ServerNet I cable is defective	Verify the ServerNet I connections using the SVU as described in Chapter 3 of this guide.
Node 2 does not join the cluster and displays a FATAL: SBA Error message	Ethernet interconnect addresses do not match between node 1 and node 2.	Boot node 2 with the Quick Install CD, perform the installation steps, and enter interconnection addresses that match node 1. See Chapter 3 of this guide.
	Network not connected with Ethernet crossover cable	Connect the cable as described in Chapter 2 of this guide.

continued

Downloaded from www.Manualslib.com manuals search engine

Replacing the EMU Board

WARNING: Only qualified service personnel should replace the EMU. Dangerous voltages are exposed when the pedestal side panel is removed. Always power off the pedestal and remove the power cords before replacing the EMU.

Tools required:

- Flat-blade or 3/16 in(5 mm) hex-head screwdriver
- # 10 TORX-head screwdriver

Perform the following procedure to replace the EMU Board:

1. Quiesce the host bus by shutting down the host system.

CAUTION: To allow the UPS to supply power while the cache is being flushed to disk, do not unplug the base pedestal from the UPS.

2. Unplug the base pedestal power cord from the wall outlet.
3. Unplug the UPS power cord from the wall outlet. The UPS will now signal the controller to flush the cache.
4. Wait until the UPS shuts down completely (this may take several minutes).
5. Power off the base pedestal and plug the UPS power cord into the wall outlet.
6. Remove the pedestal door.
7. Remove the left side cover from the pedestal (see "Reconfiguring the SCSI Bus").
8. Record the orientation of the color traces on the two ribbon cables connected at the rear of the EMU board and disconnects the cables.
9. Remove the hex standoffs from the UPS and external fault connectors on the rear panel using a hex-head or a flat-blade screwdriver (Figure 3–7).
10. Remove the board from the pedestal.

Downloaded from www.Manualslib.com manuals search engine

Pos	12NC Code	Description
R522	030050715221	RES C COMP 1 5K 1/2W
R525	030010600081	RESISTOR C F 0R 1/8W 5% 0805
R527	030010600081	RESISTOR C F 0R 1/8W 5% 0805
R529	030010600081	RESISTOR C F 0R 1/8W 5% 0805
R530	030050715221	RES C COMP 1 5K 1/2W
R533	030025601021	RESISTOR FUSIBLE 2 7R 1W %2
R600	482205130101	100R00 5% 0,062W
R601	030020610131	RESISTOR C F 100R 1/4W 5%
R602	030010615461	RESISTOR C F 150K 1/10W5% 0603
R603	482205130184	180K00 5% 0,062W
R604	482205130332	3K30 5% 0,062W
R605	482205130103	10K00 5% 0,062W
R606	482205130103	10K00 5% 0,062W
R607	030010683461	RESISTOR C F 2 2R 1/10W5% 0603
R608	030020633331	RESISTOR C F 33K 1/4W 5%
R609	030050622111	RESISTOR C F 220R 1/2W 5%
R610	030050622111	RESISTOR C F 220R 1/2W 5%
R613	482205130152	1K50 5% 0,062W
R614	030010882261	RESISTOR C F 8 2K 1/10W5% 0603
R615	482205130102	1K00 5% 0,062W
R616	030050610211	RESISTOR C F 1K 1/2W 5%
R617	030010624261	RESISTOR C F 2 4K 1/10W5% 0603
R618	482205130332	3K30 5% 0,062W
R619	030010612261	RESISTOR C F 1 2K 1/10W5% 0603
R620	030010612181	RESISTOR C F 120R 1/10W5% 0603
R621	030025601011	RESISTOR FUSIBLE 1R 1/4W 5%
R622	030025610011	RESISTOR FUSIBLE 10R 1/4W 5%
R623	030055722811	RESISTOR FUSIBLE 0 22R 1/2W 5%
R624	030020675011	RESISTOR C F 75R 1/4W 5%
R625	482211712925	47K 1% 0 063W 0603
R626	482211712925	47K 1% 0 063W 0603
R627	030020656131	RESISTOR C F 560R 1/4W 5%
R629	030050639311	RESISTOR C F 39R 1/4W
R630	030100622901	RESISTOR FUSIBLE 2 2R 1W 5%
R632	030135747901	RESISTOR FUSIBLE4 7R10%NMA0207
R633	030010656241	RESISTOR FUSIBLE 5 6K 3W 5%
R634	030020610511	RESISTOR C F 1M 1/4W 5%
R635	030011810361	RESISTOR C F 1M 1/10W 0603
R636	030010150661	RESISTOR C F 1 5M 1/10W5% 0603
R637	030010150661	RESISTOR C F 1 5M 1/10W5% 0603
R638	030010675461	RESISTOR C F 750K 1/10W5% 0603
R639	030020620211	RESISTOR C F 2K 1/4W 5%
R640	030020620211	RESISTOR C F 2K 1/4W 5%

Pos	12NC Code	Description
S506	075020800031	SOCKET CRTNARROW NECK29MM SFTY
S507	002020511160	CBLE DBLE TERM BLACK(SYH)30CM
S600	002344350250	CABLE VERTICAL BASKILI 45CM
S600	075030211001	CONN 2P VRT W/LOCK 5MM
S601	002022000140	CABLE 4P(3P)*2SKT BRD-IN45CMMN
S602	002027232280	CABLE HRZ BASKILI 42CM 7 5MM
S602	075100211781	CONN 2P K PIM 7 5MM DEGAUSS
S701	075040210051	SOCKET SCART 27'/26'/32'COMMON
T101	046933000151	TRS STP10NK80ZFP
T102	482213040959	BC547B
T104	046848000001	TRS BC848B SOT-23
T105	046848000001	TRS BC848B SOT-23
T106	046848000001	TRS BC848B SOT-23
T107	046000000131	TRS POW BD135
T200	046858000001	TRS BC858 BP
T201	046848000001	TRS BC848B SOT-23
T202	046848000001	TRS BC848B SOT-23
T304	046848000001	TRS BC848B SOT-23
T305	046848000001	TRS BC848B SOT-23
T306	046848000001	TRS BC848B SOT-23
T307	616800021121	TUNER CTF5540 THOMSON
T401	046848000001	TRS BC848B SOT-23
T402	046848000001	TRS BC848B SOT-23
T501	482213041782	BF422
T502	482213041782	BF422
T503	482213041782	BF422
T504	482213041782	BF422
T505	482213041646	BF423
T506	482213041782	BF422
T507	482213041646	BF423
T508	482213041782	BF422
T509	482213041646	BF423
T600	482213040855	BC337
T601	046848000001	TRS BC848B SOT-23
T602	046986294181	TRS 2SA720 & BC327 TO-92
T603	482213041053	BC639
T604	046933000171	TRS HOR OUT ST1803DHI
T703	046848000001	TRS BC848B SOT-23
U200	609330001251	PREAMPLIFIER TSOP2236
V101	611380012031	TRIMPOT 20K 0 1W 30% V-ADJ 5/5
W600	602300033071	TRF HRZ.DRIVE PT92
X200	049030000461	CRYSTAL 4 000 MHZ HC49U
X300	049030000501	CRYSTAL 4 433619 MHZ HC49U

Downloaded from www.Manualslib.com manuals search engine

```
15:53:38 <- ap_set_env() = 0
    attr = AP_CNTX_NAME
    val->len = 4
    val->buf = (4/4)
    52 01 00 04 R....
```

- The amount of data displayed is based on the value set for ap_trace_max_udata. For example, if ap_trace_max_udata is set to 16, only the first 16 bytes are displayed as shown below:

  ```
  val->sad.buf = (16/22)
  06 69 5F 73 73 65 6C 06 69 5F 74 73 65 6C 07
  48.i_ssel.i_tsel.H
  ```

  The item "(16/22)" indicates that 16 of the 22 bytes of data output is displayed. The following line contains the actual data in both hexadecimal and ASCII representation.

Note that for some of the A/P calls such as ap_snd(), ap_rcv() and ap_poll() the notation ">" is used to indicate input parameters and "<" indicates output parameters. For example:

```
14:53:40 -> ap_poll()
> nfds = 1
> timeout = -1
> fds = 0x68FAC6A8
> fds[0].fd = 3
> fds[0].events = 0x4
< fds[0].revents = 0x4
14:53:40 <- ap_poll() = 1
```

Tracing in Multi-threaded Applications

A/P API traces in multi-threaded applications include thread-ids of the executing threads as part of the trace output. This identifies a particular part of the trace output as belonging to a particular thread. The format of the trace output for multi-threaded applications is as follows:

```
>>> thread-id  = 5 >>>
Wed Mar  5 15:26:30 1997 -> ap_open()
<<< thread-id  = 5 <<<

>>> thread-id  = 6 >>>
Wed Mar  5 15:26:30 1997 -> ap_open()
<<< thread-id  = 6 <<<

>>> thread-id  = 7 >>>
Wed Mar  5 15:26:30 1997 -> ap_open()
<<< thread-id  = 7 <<<
>>> thread-id  = 5 >>>
>  pathname = /dev/osip1
>  oflags = 0x0
<<< thread-id  = 5 <<<
```


Downloaded from www.Manualslib.com manuals search engine

ATA/100 Cabling (for the ProLiant ML330e Server)

Identifying the Internal ATA Components

Before cabling the server, note the removable media and hard drive compartment locations as shown in Figure 4-7 and Table 4-2.

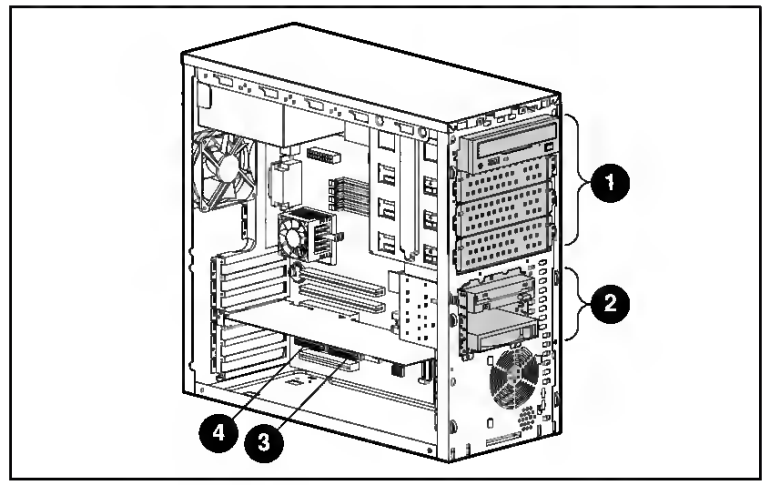

Figure 4-7. Internal ATA components

Table 4-2
Internal ATA Components

Number	Description
❶	Removable media bay area
❷	Hard drive bay area
❸	ATA connector (secondary)
❹	ATA connector (primary)

Downloaded from www.Manualslib.com manuals search engine

POST Error Messages *Continued*

Error Code	Audible Beeps L=Long S=Short	Probable Source of Problem	Action
1786-Drive Array Recovery Needed The following drive(s) need Automatic Data Recovery: Drive *X*. Select "F1" to continue with recovery of data to drive(s). Select "F2" to continue without recovery of data to drive(s).	None	Interim Data Recovery mode. Data has not been recovered yet.	Press **F1** key to allow Automatic Data Recovery to begin. Data will automatically be restored to drive *X* now that the drive has been replaced or now seems to be working. -Or- Press the **F2** key and the system will continue to operate in the Interim Data Recovery mode.
1787-Drive Array Operating in Interim Recovery Mode. Physical drive replacement needed: Drive *X*	None	Hard drive *X* failed or cable is loose or defective. Following a system restart, this message reminds you that drive *X* is defective and fault tolerance is being used.	1. Replace drive X as soon as possible. 2. Check loose cables. 3. Replace defective cables.
*1788-Incorrect Drive Replaced: Drive *X* Drive(s) were incorrectly replaced: Drive *Y* Select "F1" to continue - drive array will remain disabled. Select "F2" to reset configuration - all data will be lost.	None	Drives are not installed in their original positions, so the drives have been disabled. *See* note below.	Reinstall the drives correctly as indicated. Press **F1** to restart the computer with the drive array disabled. -Or- Press **F2** to use the drives as configured and lose all the data on them.

Downloaded from www.Manualslib.com manuals search engine

ProLiant BL e-Class Server Blade Deployment Options

The ProLiant BL e-Class server blades are designed for rapid deployment and are ideally suited for headless (unattended), network-based software installation and configuration. Rapid Deployment Pack is the optimum choice for ProLiant BL e-Class server blades and facilitates the configuration of a few or hundreds of servers from an easy-to-use, remote-based graphical deployment console. The PXE-enabled NICs and support for a bootable USB diskette drive on the ProLiant BL e-Class server blade also facilitate the use of other deployment methods.

Automated Deployment Using HP ProLiant Essentials Rapid Deployment Pack

Rapid Deployment Pack integrates two powerful products: Altiris eXpress Deployment Solution and the ProLiant Integration Module. The Deployment Server Console contains optimizations for ProLiant servers. It provides intuitive deployment jobs to deploy the standard hardware and operating system configurations and applications on any combination of server blades using both scripting and imaging, and then simultaneously deploys multiple server blades. Rapid Deployment Pack also has advanced features that can detect and display server blades based on their physical rack, enclosure, and bay locations. You can set the Deployment Server Console to automatically install pre-defined configurations on newly installed server blades.

For more information about Rapid Deployment Pack, refer to an authorized reseller, the Rapid Deployment Pack CD that ships with the enclosure, or visit the following website:

www.hp.com/servers/rdp

SECTION 5
EXPLODED VIEWS & PARTS LIST

5-1. EXPLODED VIEW & MECHANICAL REPLACEMENT PARTS LIST

❶ CHASSIS PARTS SECTION (1)

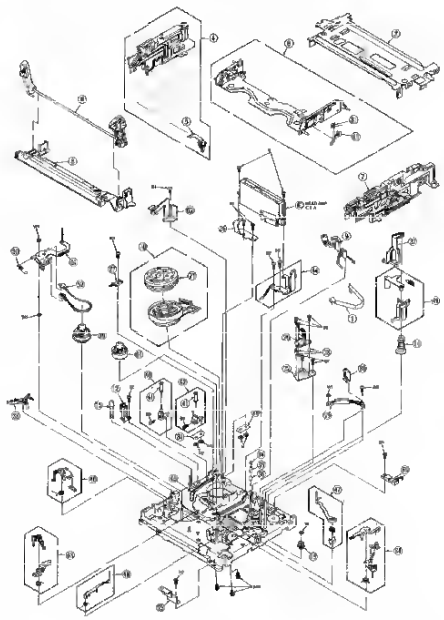

5—1

❷ CHASSIS PARTS SECTION (2)

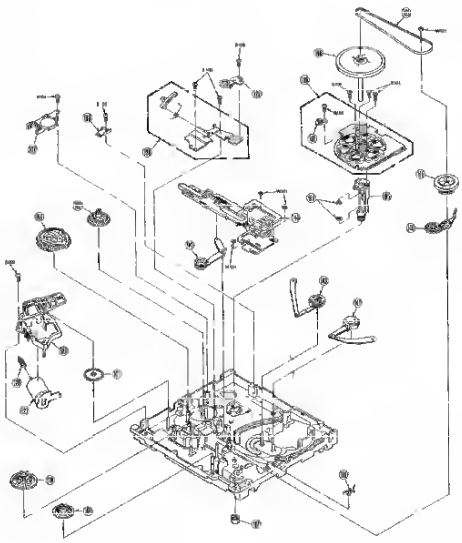

5—3

5—2

Downloaded from www.Manualslib.com manuals search engine

Hızlı kurulum

Televizyonu ilk açtığınızda, ekranda bir menü belirecektir. Bu menü ile ülkeyi belirleyeceğiniz gibi dili de belirleyeceksiniz:

Eğer, ekranda menü belirmezse, menüyü görüntüye alabilmek için televizyonun ◿ −ve ◿ + tuşlarına 5 saniye basılı bekleyin.

❶ Uzaktan kumandanın ⌃⌄ tuşuna basarak ülkeyi belirleyin, sonra ⌄ tuşu ile konfirme edin.
Eğer sizin ülkeniz belirmezse "..." yi seçin.

❷ ⌃⌄ tuşu ile dili seçin, sonra ⌄ ile konfirme edin.

❸ Otomatik arama derhal başlayacaktır. Mevcut olan bütün tv ve radyo programları otomatik olarak hafızaya alınacaktır. İşlem birkaç dakika sürecektir. Ekran göstergesi gelişmeleri ve hafızaya alınan kanal sayısını gösterecektir. İşlem sonuçlandığında menü silinir.
Aramayı kesmek ya da çıkmak için MENU'ya basın. Eğer, hiçbir kanal bulunamamışsa s.10'deki tavsiyeler bölümünü okuyun.

❹ Eğer verici ya da tv kablo sistemi otomatik ayar sinyali dağıtıyorsa kanallar sıra ile hafızaya alınacaktır. Böylece **kuruluş** sonçlanmış olur.

❺ Aksi durumda, kanalları numaralandırmak için **Sıralandırma** sistemini kullanmak zorundasınız.
Bazı vericiler ya da kablo dağıtıcıları kendisıralama parametrelerini kullanmaktadırlar (bolge, dil ...). Bu durumda, ⌃⌄ tuşu ile seçiminizi belirtip ⌄ tuşu ile de konfirme etmelisiniz.

* *Sadece radyo yayınlarını ileten modellerde geçerlidir.ç*

Kanalların programlanması

❶ MENU tuşuna basın. Ekranda **Ana Menü** belirecektir.

❷ Oklar yardımı ile, önce **kuruluş** sonra **Programlama** menüsüne basın.

❸ ⌃⌄ tuşu ile istediğiniz kanalı seçin ve ⌄'ya basın.

❹ ⌃⌄ tuşunu kullanarak yeni numarayı belirleyin ve ⌃ ile konfirme edin.

❺ Belirlenecek numara sayısı kadar ❸ ve ❹. etabı tatbik edin.

❻ Menüden çıkmak için ⊡ tuşuna basın.

Kanal adı

Eğer isterseniz bir kanalı dış prize alabilir ve bir isim verebilirsiniz.
Not: Yerleştirme anında, kanal isimleri otomatik olarak, verici sinyalini alınca belirlenir.

❶ MENU tuşuna basın.

❷ Oklar yardımı ile, **Kurulum'a** sonra **Program Ismine** basın.

❸ İsmini seçmek ya da değiştirmek istediğiniz kanalı ⌃⌄ tuşu ile seçin.

❹ ⌃⌄ tuşunu kullanarak, yeni numarayı seçin ve ⌃⌄ ile konfirme edin.

❺ Isim girilince, ⌃'ye basınız.
Program adı hafızaya alınmıştır.

❻ Adlandıracağınız her kanal için ❸ ile ❺. etapları tekrarlayın.

❼ Menüyü ⊡ ile terkedin.

Downloaded from www.Manualslib.com manuals search engine

verfpi-0.book Page 69 Thursday, October 19, 2000 1:51 PM

Index

A

adding options
- cable guise 41
  - reinstall 42
  - remove 41
- external monitor 51
- modem 52
- multimedia devices 43
  - CD player 46
  - earphones, headphones 43
  - external speakers 45
  - microphone 43
- network 47
- parallel printer 50
- serial mouse 49
- USB joystick and digital camera 48

adjusting LCD monitor 33
- on-screen display 34

C

computer maintenance 4
- cleaning 4
- servicing 4

D

disk drives 21
- CD-ROM/DVD-ROM/CD-R/W drive 22
  - inserting 22
  - taking care CDs and DVDs 23
- floppy drive 21
  - not write protect 21
  - write protect 21
- hard disk drive 23

F

features 9
- connectivity 9
- design 10
- ergonomics 10
- multimedia 9
- performance 9

front panel 11

K

keyboard 16

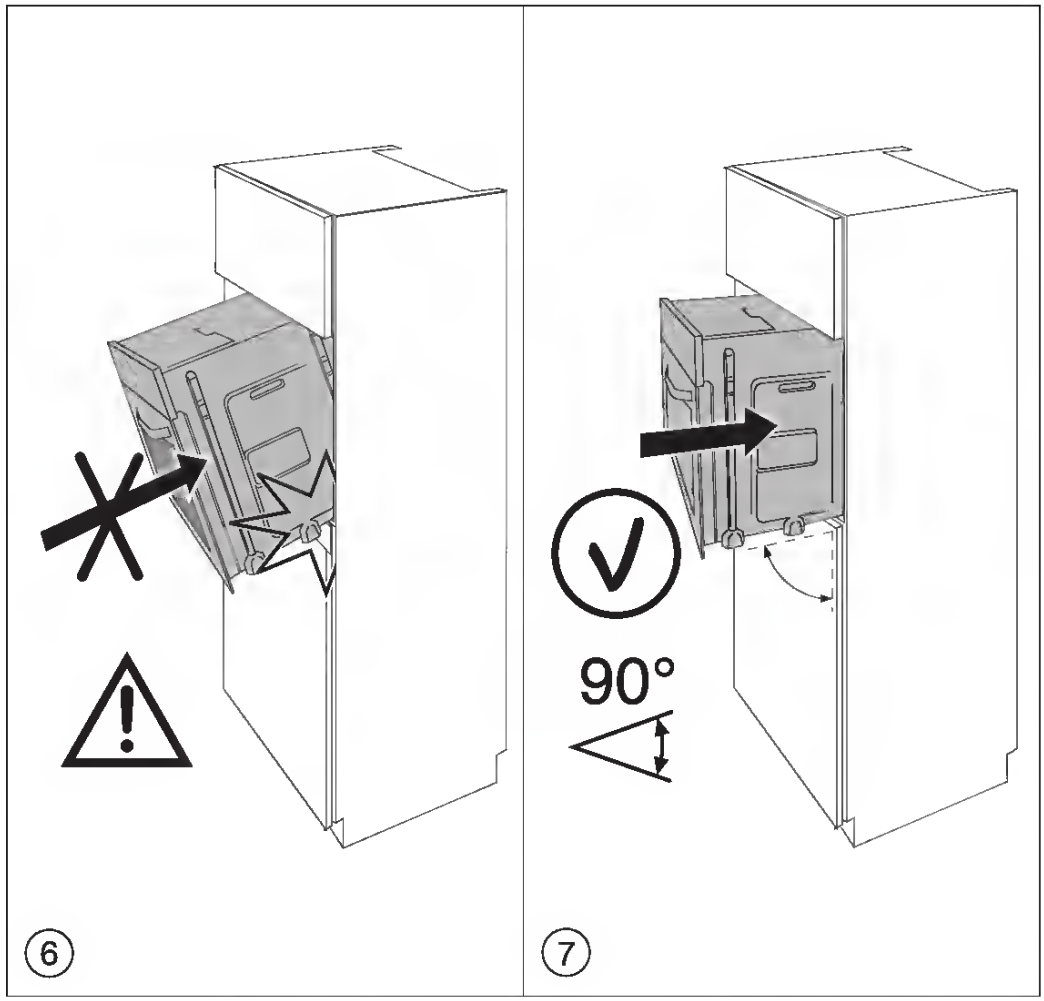

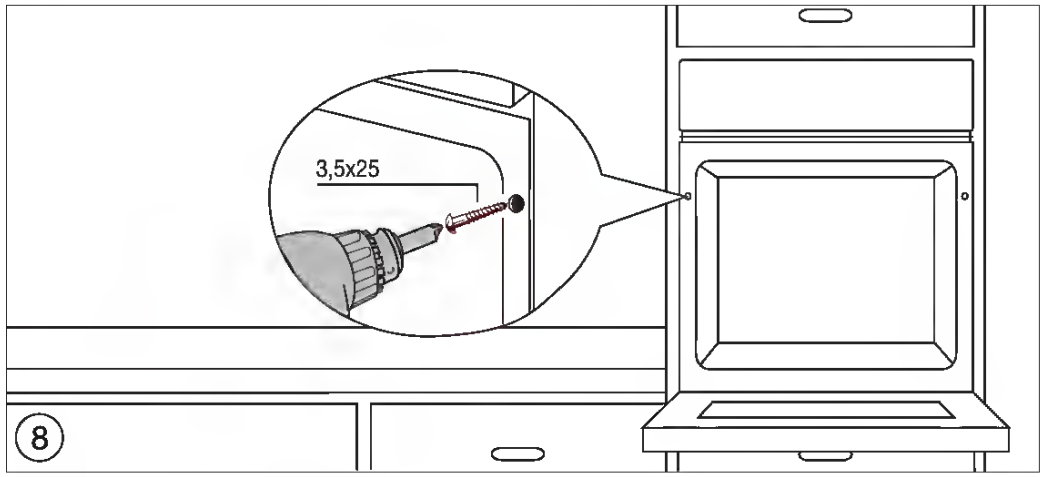

Downloaded from www.Manualslib.com manuals search engine

ser guides at all-guides.com

5 Software

- ❑ 제품을 수리하거나 비 핫 플러그 부품을 교체하기 전에 먼저 잠금/태그(Lockout/Tagout) 절차에 따라 AC 전원에서 완전면결형 UPS 제품을 분리하십시오.
- ❑ 전지를 테스트하려면 TEST/ALARM RESET 단추를 누르십시오. UPS에서 AC 전원을 분리하려면 먼저 보호된 오든 부하를 분리하십시오.
- ❑ 제품을 수리하거나 비 핫 플러그 부품을 교체하기 전에 먼저 제품에서 연결분리형 UPS를 분리하고 AC 전원에서 UPS의 플러그를 뽑아야 합니다.
- ❑ UPS 출력에 과부하가 걸리지 않게 하십시오. 연결된 총 부하는 정격 출력의 80%를 넘지 않아야 합니다.
- ❑ 해당 시스템의 UPS 유형의 누설 전류 한계를 초과하지 마십시오. 이 한계에 대해서는 본 설명서의 뒤에 나오는 "누설 전류 접지" 단원을 참조하십시오.
- ❑ 랙 설치 사양의 경우, 단일 장비 랙에 허용되는 최대 UPS 수를 넘지 마십시오.
- ❑ 랙 설치 사양의 경우, UPS를 랙의 맨 아래에만 설치해야 합니다.

■ REPO(원격 긴급 전원 차단) 포트를 설치할 때 신체의 상해나 장비 손상을 방지하려면 다음과 같이 하십시오.

- ❑ 반드시 유자격 전기 기술자가 REPO 포트를 면결해야 합니다.
- ❑ REPO 포트를 연결하기 전에 먼저 UPS의 주 AC 전원 차단 장치가 잠겨있는지 그리고 OFF 위치로 태그되어 있는지 확인하십시오.
- ❑ 북미 지역의 경우, REPO 회로는 반드시 2급 회로에 대한 국가 전기 코드(NFPA 70, 725항) 규정을 준수해야 합니다. 기타 지역 및 국가의 경우, 해당 제품을 설치한 장소의 국가 및 지역 표준을 준수해야 합니다.

■ 전지를 설치하거나 수리할 때 감전으로 인한 신체의 상해 또는 장비 손상을 방지하려면 다음과 같이 하십시오.

- ❑ 숙련된 서비스 기술자가 전지를 다루거나 면결해야 합니다.
- ❑ 해당 장비에 작업을 하기 전에 시계, 반지 또는 기타 금속 액세서리를 벗어야 합니다.
- ❑ 절면 손잡이가 달린 공구를 사용하십시오.
- ❑ 원격 외장형 전지를 사용하는 제품의 경우, 먼저 모든 전지 회로 차단기를 OFF(꺼짐) 위치로 둔 후에 전지를 교체하십시오. 전지에는 고압 전류가 흐릅니다.

■ 본 제품에는 산이 포함된 납 축전지가 들어있을 수 있습니다. 화재나 화학적 화상을 방지하려면 다음과 같이 하십시오.

- ❑ 장비에서 전지를 빼낸 후에 전지를 재충전하지 마십시오.
- ❑ 전지를 해체하거나 부수거나 구멍을 내지 마십시오.
- ❑ 전지의 외부 접점을 단락시키지 마십시오.
- ❑ 전지를 물에 담그지 마십시오.
- ❑ 전지를 60°C 이상의 온도에 노출시키거나 불에 태우지 마십시오.
- ❑ 본 장비용으로 제작된 HP 전지만 사용하십시오.

배전반(PDU)

배전반 설치 및 수리 시 감전이나 장비 손상을 방지하려연 다음과 같이 하십시오.

- 배전반의 설치 및 정기적인 유지 관리와 수리는 반드시 AC 전원 제품에 대한 절차와 예방책 그리고 위험을 잘 아는 숙련된 서비스 기술자가 합니다.
- 완전면결형 배전반은 전용 AC 분기 회로(AC 메인)에 직접 면결해야 합니다. 면결은 반드시 북미 지역의 국가 전기 코드(NFPA70 310항)나 해당 국가 및 지역의 상응하는 배선 규정에 따른 자격을 갖춘 전기 기술자가 해야 합니다.
- 제품을 수리하거나 교체하기 전에 먼저 잠금/태그 절차에 따라 AC 전원에서 완전면결형 배전반을 분리하십시오.
- 제품을 수리하거나 교체하기 전에 먼저 제품에서 면결분리형 배전반을 분리하고 전기 콘센트에서 배전반의 플러그를 뽑아야 합니다.
- 배전반의 출력에 과부하가 걸리지 않게 하십시오. 면결된 총 부하는 정격 입력을 초과해서는 안됩니다.
- 해당 시스템의 배전반 유형의 누설 전류 한계를 초과하지 마십시오. 이 한계에 대해서는 본 설명서의 뒤에 나오는 "누설 전류 접지" 단원을 참조하십시오.

Downloaded from www.Manualslib.com manuals search engine

>Maintain one and only one counter to generate sequence numbers at a manufacture site in different factory (Factory1/Factory2) and different product (NB,/Tablet/SHH) that with a unique **MM** code

VV:

>Engineering version code of hardware, two characters defined by **ODM/vendor**. Please use alphanumeric characters, including **0~9** and **A~Z** only (**Excluding O and I**). Special characters are not allowed here. If **ODM** do not need to use this **VV** code, keep it as "**00**".

This code does not be used to generate **SNID**. In other words, a **SNID** code does not contain **VV** data.

PSA30200129140O1FF0101 (sample)			
Definition Items	Value	Source	Remark
ACER FG PN	PSA3020012	PS.A3020.012	By PLM system
Year	9	Year 2009	Last digit of year
Week	14	Week 14	Week code, follow ISO8601
Serial Number	001FF	00000 ~ EFFFF	5 unique hexadecimal codes, **maximum capacity 983,039**
MM	01	00 ~ 9Z	Manufacturer code, two digits defined by Acer SIC for ODM/Vendor
Version	01	00 ~ ZZ	Engineering version code of hardware, two characters defined by ODM/vendor

Downloaded from www.Manualslib.com manuals search engine

```
Top># config
Top>Config>#    Return
Commands may be abbreviated.  Commands are:

addhost          addnet           atalkas          backup           console
datetime         delhost          delnet           dftroute         dns
etherif          help             initsetup        ipas             ipx
manager/         maxsessions      nodename         ports/           protocol
quit             service/         session/         snmp             softwarekey
srvports         srvsetup         subnet           top/             upgrade
viewhosts        viewnets         ^                !

Top>Config># init
```

Step 10 Enter **init** (at *Top>Config>*) to start the initsetup routine.

Step 11 Follow the menus in the initsetup; they will guide you through the essential items that must be configured for basic LCS60 operation (as shown in Figure 3-2). A sample **initsetup** session is presented on the following screen.


```
Top>Config># init

                LCS60 Initial Setup and Configuration Procedure

The "initsetup" procedure leads you through the steps to initially set up this
LCS60 by entering the node name, time and date, and the software key.

*** This step allows the LCS60 Administrator to set the node name.
*** This is the name by which other hosts know this LCS60.

The LCS60 is currently called "sysV68".
        ==> Do you want to change it? [y, n, ?, q] y

    Enter the new node name for this LCS60
    [? for help, q to quit]
    ==>  morse

*** This step allows the LCS60 Administrator to set the timezone, date, and
*** time of the LCS60 system clock.

Current time and time zone is: 13:33 EST
        ==> Change the time zone? [y, n, ?, q] n

Current date and time: Mon. 08/17/95 13:33
        ==> Change the date and time? [y, n, ?, q] n
```


Downloaded from www.Manualslib.com manuals search engine

Setting Up a Public Interconnect

It is possible—but not recommended—to use a public network as your dedicated interconnect path. To set up a public Ethernet interconnect, connect the Ethernet cards, hub, and cables as you would in a nonclustered environment. Then configure the Ethernet cards for both network clients and for the cluster interconnect.

IMPORTANT: Using a public network as your dedicated interconnect path is not recommended because it represents a potential single point of failure for cluster communication.

NOTE: ServerNet is designed to be used only as a private or dedicated interconnect. It cannot be used as a public interconnect.

Redundant Interconnect

MSCS allows you to configure any certified network card as a possible path for intracluster communication. If you are employing a dedicated interconnect, use MSCS to configure your LAN network cards to serve as a backup for your interconnect.

See the "Recommended Cluster Communication Strategy" section in Chapter 2 of this guide for more information about setting up redundancy for intracluster and cluster-to-LAN communication.

Downloaded from www.Manualslib.com manuals search engine

English

Acer Incorporated
8F, 88, Sec. 1, Hsin Tai Wu Rd., Hsichih
Taipei Hsien 221, Taiwan, R.O.C.

Tel: 886-2-2696-1234
Fax: 886-2-2696-3535
www.acer.com

Declaration of Conformity for CE marking

We,

Acer Inc.
8F, 88, Sec. 1, Hsin Tai Wu Rd., Hsichih,
Taipei Hsien 221, Taiwan, R. O. C.

Contact Person: Mr. Easy Lai
Tel: 886-2-8691-3089 Fax: 886-2-8691-3000
E-mail: easy_lai@acer.com.tw

Hereby declare that:

Product:	Notebook PC
Trade Name:	Acer
Model Number:	ZA1
Machine Type:	TravelMate 3200
SKU Number:	TravelMate 320xxx ("x" = 0~9, a ~ z, or A ~ Z)

Is in compliance with the essential requirements and other relevant provisions of the following EC directives.

Reference No.	**Title**
89/336/EEC	Electromagnetic Compatibility (EMC directive)
73/23/EEC	Low Voltage Directive (LVD)
1999/5/EC	Radio & Telecommunications Terminal Equipment Directive (R&TTE)

The product specified above was tested conforming to the applicable Rules under the most accurate measurement standards possible, and that all the necessary steps have been taken and are in force to assure that production units of the same product will continue to comply with the requirements.

Easy Lai
Easy Lai/ Director
Qualification Center
Product Assurance, Acer Inc.

2004/3/5
Date

Downloaded from www.Manualslib.com manuals search engine

ENGLISH Digital Still Camera Mode (SC-D353/D354/D355 only)

Memory Stick (Optional Accessory)

✤ The Memory Stick stores and manages images recorded by the Camcorder.

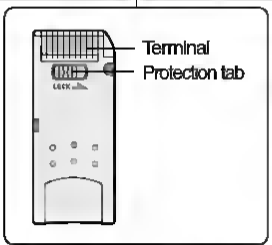

Memory Stick Functions

- Recording still images and MPEG4 movies
- Viewing still images and MPEG4 movies
  - Single
  - Slide show (Still images only)
  - Multi display (Still images only)
- Protecting images against accidental erasure
- Deleting images recorded on a Memory Stick
- Print marking still images
- Formatting a Memory Stick

[Notes]

- You can use most of the Camcorder's functions when recording to the Memory Stick
- "⊙ ▶▶▶" appears on the screen while recording to the Memory Stick.
- While recording or loading an image, do not eject or insert the Memory Stick
  Inserting or ejecting a Memory Stick while recording or loading an image can cause data damage.
- If you want to save all images on the Memory Stick, set the write protect tab on the Memory Stick to LOCK.

MEMORY STICK™

- "Memory Stick" and "MEMORY STICK" are trademarks of Sony Corporation
- All other product names mentioned herein may be the trademarks or registered trademarks of their respective companies
  Furthermore, "™" and "®" are not mentioned in each case in this manual

數位照相機模式 (僅限SC-D353/D354/D355)

臺 灣

Memory Stick記憶卡(另購)

✤ 記憶卡用於儲存和管理攝影機所拍的照片。

記憶卡的功能

- 錄製靜態照片及MPEG4影片。
- 觀看靜態照片及MPEG4影片。
  - 單張播放
  - 順序播放(僅限靜態照片)
  - 多幅畫面(僅限靜態照片)
- 防止照片被意外刪除。
- 刪除錄製在記憶卡上的照片。
- 作照片的列印標記。
- 格式化記憶卡。

[說明]

- 您可使用大部份的數位相機功能來錄製影像到記憶卡上。
- 在錄製到記憶卡上時"⊙ ▶▶▶"會出現在螢幕上。
- 在錄製或記錄照片時,不要取出或裝入記憶卡。
  - 在錄製或記錄照片時取出或裝入記憶卡會造成數據的損壞。
- 如果您要保存記憶卡內所有的影像,請將記憶卡上保護標簽置於鎖定LOCK。

MEMORY STICK™

- "Memory stick"和 "MEMORY STICK" 為SONY公司的商標。
- 此處所提到其他產品名稱為其各自公司的註冊商標。
  本手冊中有提到的"™"和"®"不再另作聲明。

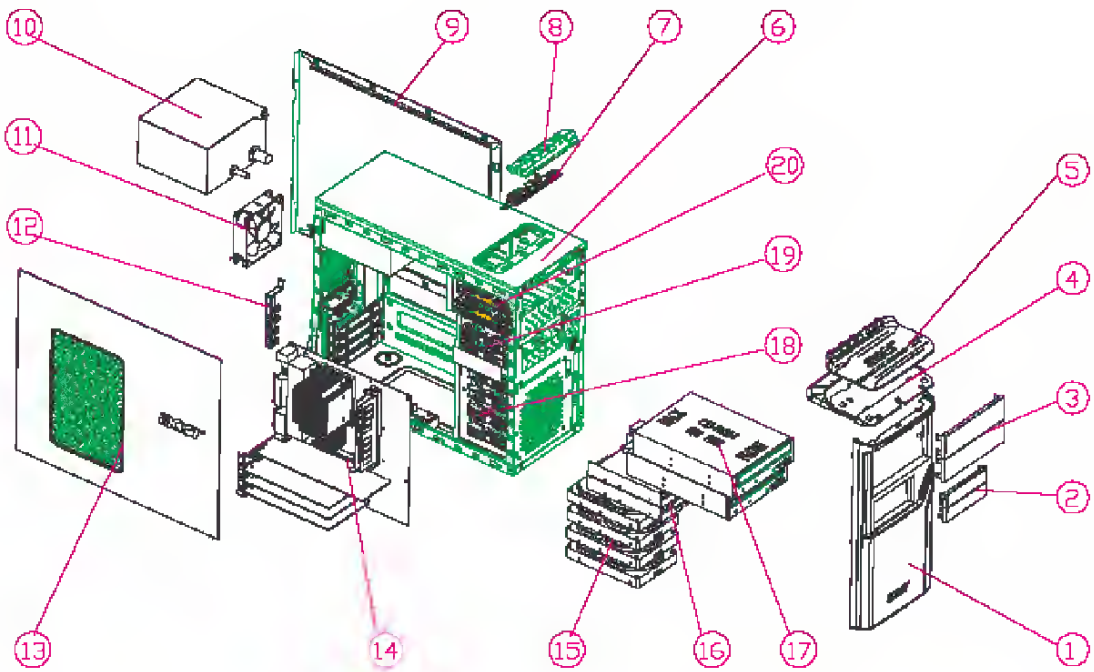

NO	DESCRIPTION	NO	DESCRIPTION
I	AM30-MAIN-BEZEL	1I	FAN
2	3-25-COVER	12	PCI-BRACKET
3	5-25-COVER	I3	LEFT SIDE DOOR
4	AM30-USB	14	NOTHERBOARD
5	AM30-USB-PENEL	15	HDD
6	CHASSIS	I6	3 5' DEVICE
7	USB-PCE-ASN	17	CD-ROM
8	USB-SHTELDING	18	HDD-LOCK-SLIDE
9	RIGHT SIDE DOOR	19	FDD-LOCK-SLTDE
I0	POWER SUPPLY	20	CD-ROM LOCK SLIDE

Downloaded from www.Manualslib.com manuals search engine

European Union (EU)

This device complies with the essential requirements of the European Council Directives listed below:

73/23/EEC Low Voltage Directive

- EN 60950

89/336/EEC Electromagnetic Compatibility (EMC) Directive

- EN 55022
- EN 55024
- EN 61000-3-2/-3

99/5/EC Radio & Telecommunications Terminal Equipment (R&TTE) Directive

- Art.3.1a) EN 60950
- Art.3.1b) EN 301 489 -1/-17
- Art.3.2) EN 300 328-2
- Art.3.2) EN 301 893 *applies to 5 GHz only

CE ① (for 5 GHz device)

List of Applicable Countries

EU member states as of May 2004 are: Belgium, Denmark, Germany, Greece, Spain, France, Ireland, Italy, Luxembourg, the Netherlands, Austria, Portugal, Finland, Sweden, United Kingdom Estonia, Latvia, Lithuania, Poland, Hungary, Czech Republic, Slovak Republic, Slovenia, Cyprus and Malta. Usage allowed in the countries of European Union, as well as Norway, Switzerland, Iceland and Liechtenstein. This device must be used in strict accordance with the regulations and constraints in the country of use. For further information, please contact local office in the country of use.

The FCC RF safety requirement

The radiated output power of Wireless LAN Mini-PCI Card and Bluetooth® card is far below the FCC radio frequency exposure limits. Nevertheless, the Notebook PC series shall be used in such a manner that the potential for human contact during normal operation is minimized as follows:

Downloaded from www.Manualslib.com manuals search engine

Figure 5-3 shows a PDC/O1000 with two non-redundant Fibre Channel Fabrics or two non-redundant FC-ALs. The hardware for the second Fibre Channel Fabric or FC-AL is shaded.

NOTE: You can mix non-redundant Fibre Channel Fabrics and non-redundant FC-ALs in the same PDC/O1000 cluster.

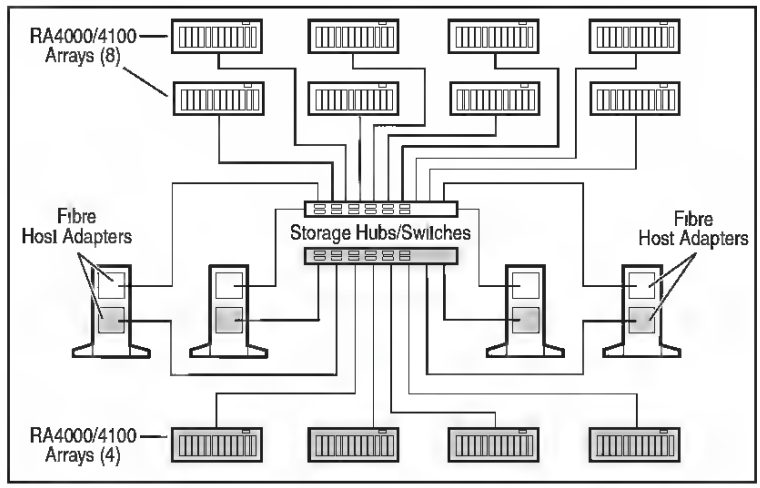

Figure 5-3. PDC/O1000 cluster with two non-redundant Fibre Channel Fabrics or non-redundant FC-ALs

Cabling the Ethernet Cluster Interconnect

A PDC/O1000 running Oracle8*i* software is an Ethernet cluster interconnect.

The following components are used in a non-redundant Ethernet cluster interconnect:

- One Ethernet adapter in each cluster node
- Ethernet cables and a switch or hub
  - For two-node PDC/O1000 clusters, you can either use one Ethernet crossover cable or one 100-Mbit/second Ethernet switch or hub and standard Ethernet cables to connect the two servers.
  - For PDC/O1000 clusters with three or more nodes, you use one 100-Mbit/second Ethernet switch and standard Ethernet cables to connect the servers.

Downloaded from www.Manualslib.com manuals search engine

Table 3-2
POST Error Messages *continued*

Error Code	Audible Beeps	Probable Source of Problem	Recommended Action
1761-Fixed Disk 1 does not support Block Mode	None	Hard drive error	Run the System Configuration Utility and correct.
1764-Slot *x* Drive Array – Capacity Expansion Process is temporarily disabled (followed by any one of these statements): ■ Expansion will resume when Array Accelerator has been reattached. ■ Expansion will resume when Array Accelerator has been replaced. ■ Expansion will resume when Array Accelerator RAM allocation is successful. ■ Expansion will resume when Array Accelerator battery reaches full charge. ■ Expansion will resume when automatic data recovery has been completed.			Reattach or replace array accelerator, wait until the array accelerator batteries have charged, or for Automatic Data Recovery to complete, as indicated.
1765-Slot *x* Drive Array Option ROM Appears to Conflict with an ISA Card. ISA cards with 16-bit memory cannot be configured in memory range C0000 to DFFFF along with the SMART-2/E 8-bit Option ROM due to EISA bus limitations. Please remove or reconfigure the ISA card.			Remove or reconfigure conflicting ISA cards. Disable "shared memory" on any ISA network cards that may be installed.
1766-Slot *x* Drive Array requires System ROM Upgrade. Run Systems ROMPaq Utility.			Run the latest Systems ROMPaq Utility to upgrade the System ROMs.
1767-Slot *x* Drive Array Option ROM is Not Programmed Correctly or may Conflict with the Memory Address Range of an ISA Card. Check the Memory Address Configuration of installed ISA Card(s) or run Options ROMPaq Utility to attempt SMART-2/E Option ROM Reprogramming.			Remove or reconfigure conflicting ISA cards, especially any cards that are not recognized by the System Configuration Utility. Try reprogramming the ROM on the SMART-2/E Controller using the latest Options ROMPaq (version 2.29 or higher).
1768-Slot *x* Drive Array-Resuming logical drive expansion process.	None	SMART-2 Controller error	No action required. Displays whenever a controller reset or power cycle occurs while array expansion is in progress.
1769-Slot *x* Drive Array – Drive(s) disabled due to failure during expand. Select F1 to continue with logical drives disabled. Select F2 to accept data loss and to re-enable logical drives.	None	SMART-2 Controller error. Data has been lost while expanding the array; therefore, the drives have been temporarily disabled.	Press **F2** to accept the data loss and re-enable the logical drives. Restore data from backup.

continued

Downloaded from www.Manualslib.com manuals search engine

802-xx 824-xx	Video memory test failed. Monochrome video text mode test failed.	The following steps apply to error codes 802-xx and 824-xx: 1. Replace monitor and retest. 2. Replace the Advanced VGA board and retest. 3. Replace monochrome board and retest. 4. Replace the system board and retest.

Downloaded from www.Manualslib.com manuals search engine

Note: Acer Dual-Band 11b/g Wireless Mini PCI Adapter implements transmission diversity function. The function does not emit radio frequencies simultaneously from both antennas. One of the antennas is selected automatically or manually (by users) to have good quality of radiocommunication.

2 An improper installation or unauthorized use may cause harmful interference to radio communications. Also any tampering of the internal antenna will void the FCC certification and your warranty.

Canada - Low power license-exempt radiocommunication devices (RSS-210)

a. Common information
Operation is subject to the following two conditions:
1. This device may not cause interference, and
2. this device must accept any interference, including interference that may cause undesired operation of the device.

b. Operation in 2.4 GHz band
To prevent radio interference to the licensed service, this device is intended to be operated indoors and installed outdoors is subject to licensing.

Exposure of humans to RF fields (RSS-102)

Aspire 1510 series employs low gain integral antennas that do not emit RF field in excess of Health Canada limits for the general population; consult Safety Code 6, obtainable from Health Canada's Web site at www.hc-sc.gc.ca/rpb.

Downloaded from www.Manualslib.com manuals search engine

Locating the I/O Expansion Slots

The I/O expansion slots are located in the I/O Module, and are accessed by sliding the server out of the rack and opening the top access panel as described in Chapter 3, "Server Operation."

WARNING: To reduce the risk of personal injury from hot surfaces, allow the internal system components to cool before touching them.

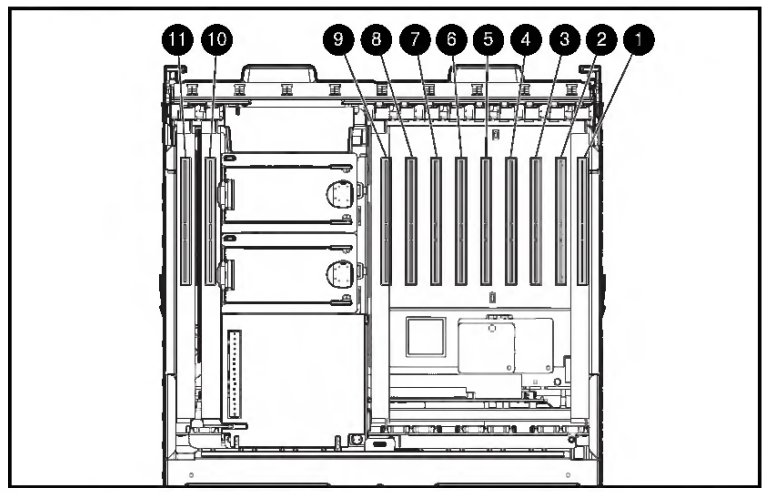

Figure 4-22. Top view of I/O slots

The I/O expansion slots are distributed among three I/O buses. For more information about these buses, refer to the section titled "Bus Distribution" later in this chapter.

Downloaded from www.Manualslib.com manuals search engine